Pacific LA Marine Terminal LLC
(PLAMT)

moffatt & nichol

Pier 400 Berth 408
Value Engineering Study

October 19, 2010

Prevention First 2010
Twenty years of Prevention 1990 - 2010

Pier 400 Berth 408

Outline

- Proposed Project
- Development Evolution
- VE Alternatives Evaluated
- Details of POLA 100% Design
- Component Details
- Details of Scenario #1
- Results and Comparisons
- Next Steps

Proposed Project

Project Location

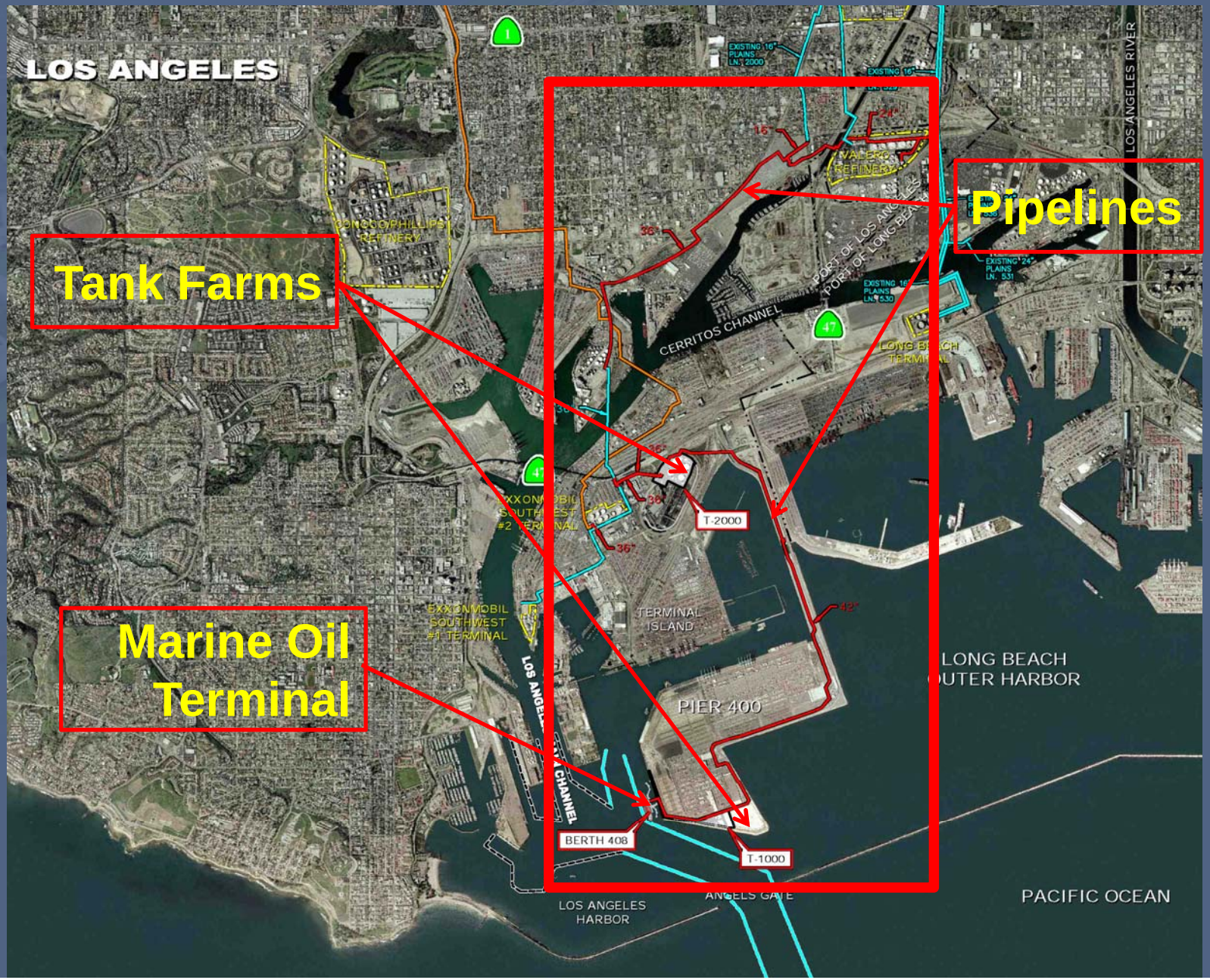

Rendering of Marine Terminal

Range of Ships Accommodated

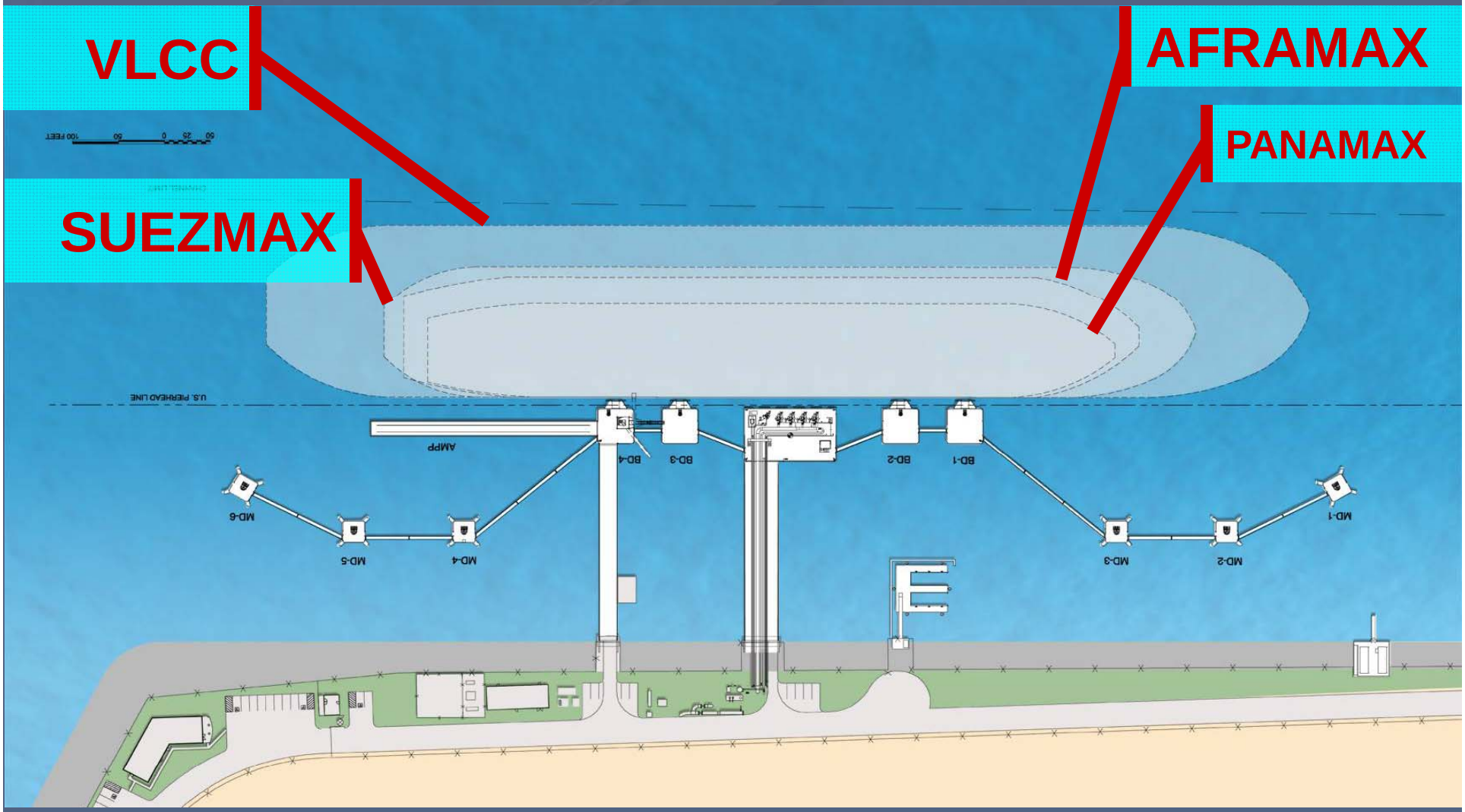

Vessel Particulars

Item	Parameters			
Vessel class	VLCC	SUEZMAX	AFRAMAX	PANAMAX
DWT (mt)	325,000	152,000	105,000	66,000
Displacement (mt)	370,000	174,000	125,000	77,000
LOA (ft)	1,135	883	800	748
Beam (ft)	197	150	138	106
Loaded draft (ft)	74	57	49	42
Ballast draft (ft)	33	27	23	23

Development Evolution

Development Evolution

- ***Started as a traditional MOT development within the POLA***
  - *POLA designs, procures, and constructs the marine and related civil & structural landside facilities for the proposed tenant*
  - *Tenant (PLAMT) designs, procures, and constructs the mechanical and electrical facilities*
  - *At the end of 2009, POLA was at 100% completion on the marine facilities design and PLAMT was at about 60% completion on the design of the M&E facilities*

Development Evolution (Cont'd)

- ***The economy slowdown brought changes to this delivery model in early 2010***
  - *PLAMT will now be responsible for the design and construction of all aspects of the MOT development, including the marine facilities traditionally done by POLA*
  - *POLA will have review & approval responsibilities throughout the development of the project*

Development Evolution (Cont'd)

- *PLAMT stepped back and assessed how to move forward with the development. This raised some questions:*
  - *Should PLAMT just take over where POLA left off on the marine design?*
  - *Are there construction risks that should be evaluated further? POLA identified construction risks associated with driving thru rock lenses known to exist at this site.*
  - *Are there opportunities to reduce costs as the lead in the design of the marine structures?*

Development Evolution (Cont'd)

- *PLAMT made a decision to address these questions and authorized a Value Engineering (VE) Study to be done for the marine structures. The VE Study was to accomplish the following:*
  - *Concepts must address the potential impacts to the approved EIR, which was based on the POLA 100% Design*
  - *The risk of driving through the rock lenses must be quantified*
  - *The base case would be POLA's 100% Design Submittal*
  - *Those structures to be evaluated included the following:*

VE Study Basis

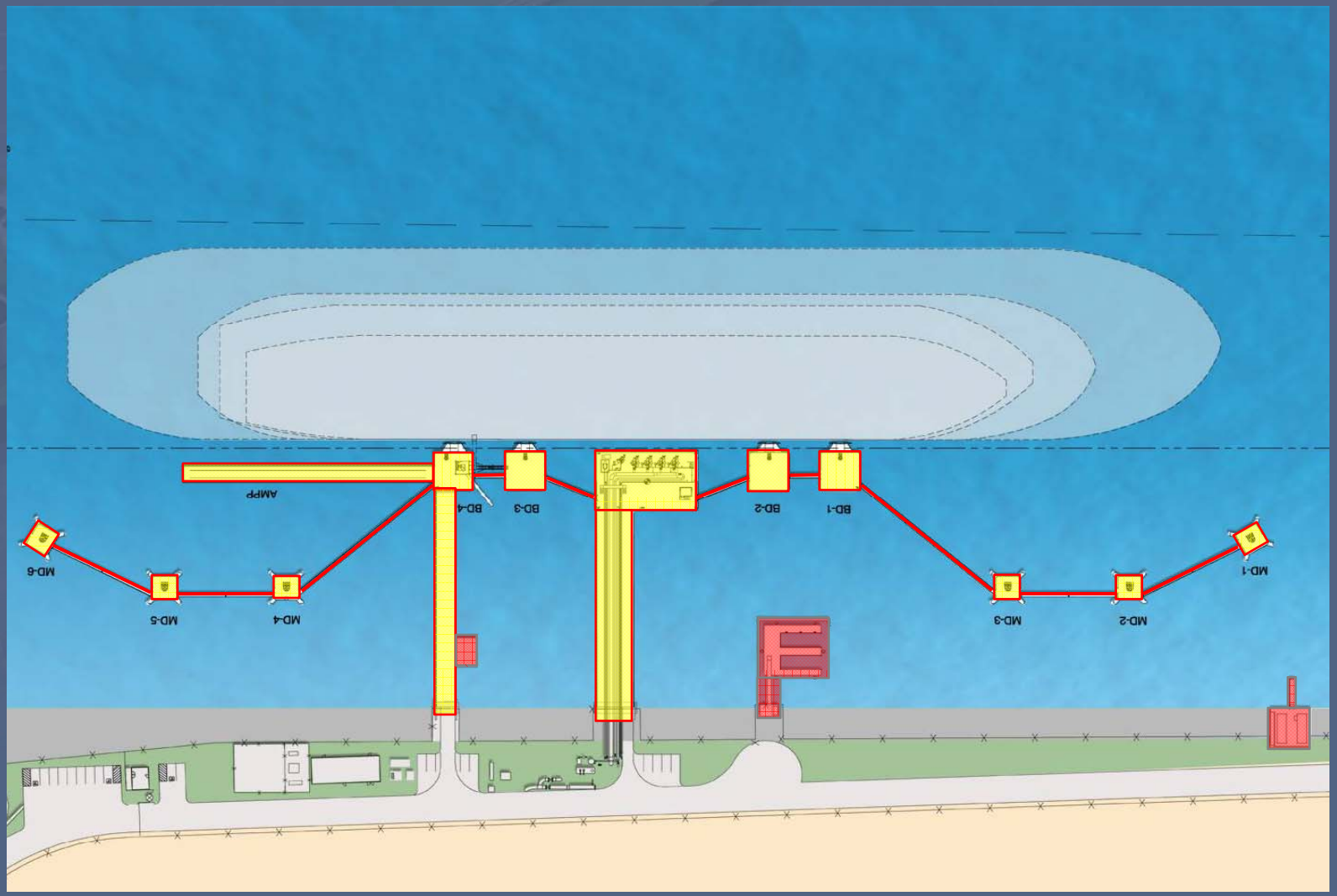

Alternatives Evaluated

- *Components of POLA 100% Submittal*
  - *Major structures supported on vertical, large-dia. steel pipe piles (54" Dia.), with cast-in-place concrete decks for structures and trestles*
  - *Short spans on trestles and walkways*

General Arrangement

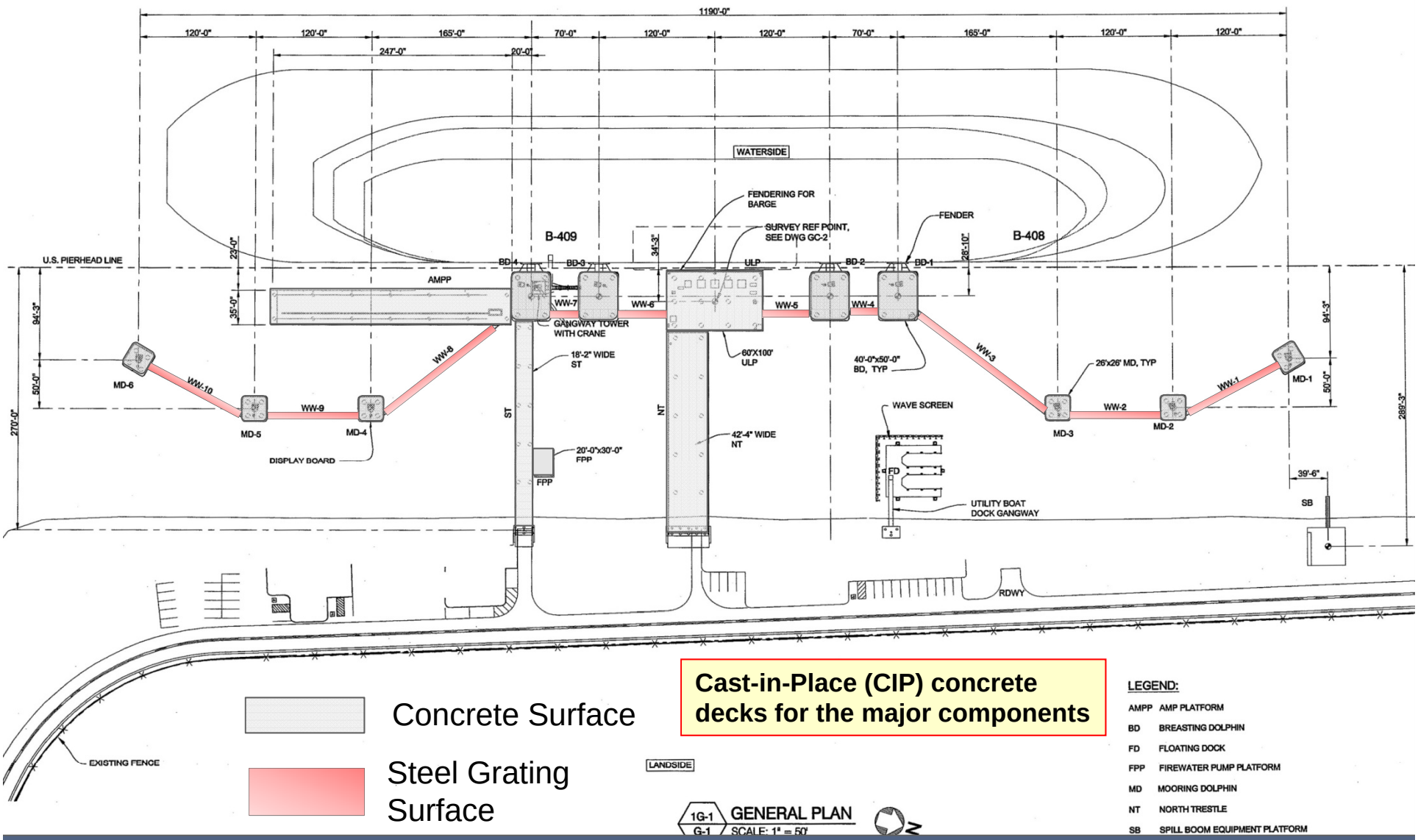

Concrete Surface

Steel Grating Surface

Cast-in-Place (CIP) concrete decks for the major components

Typical Section thru ULP & NT

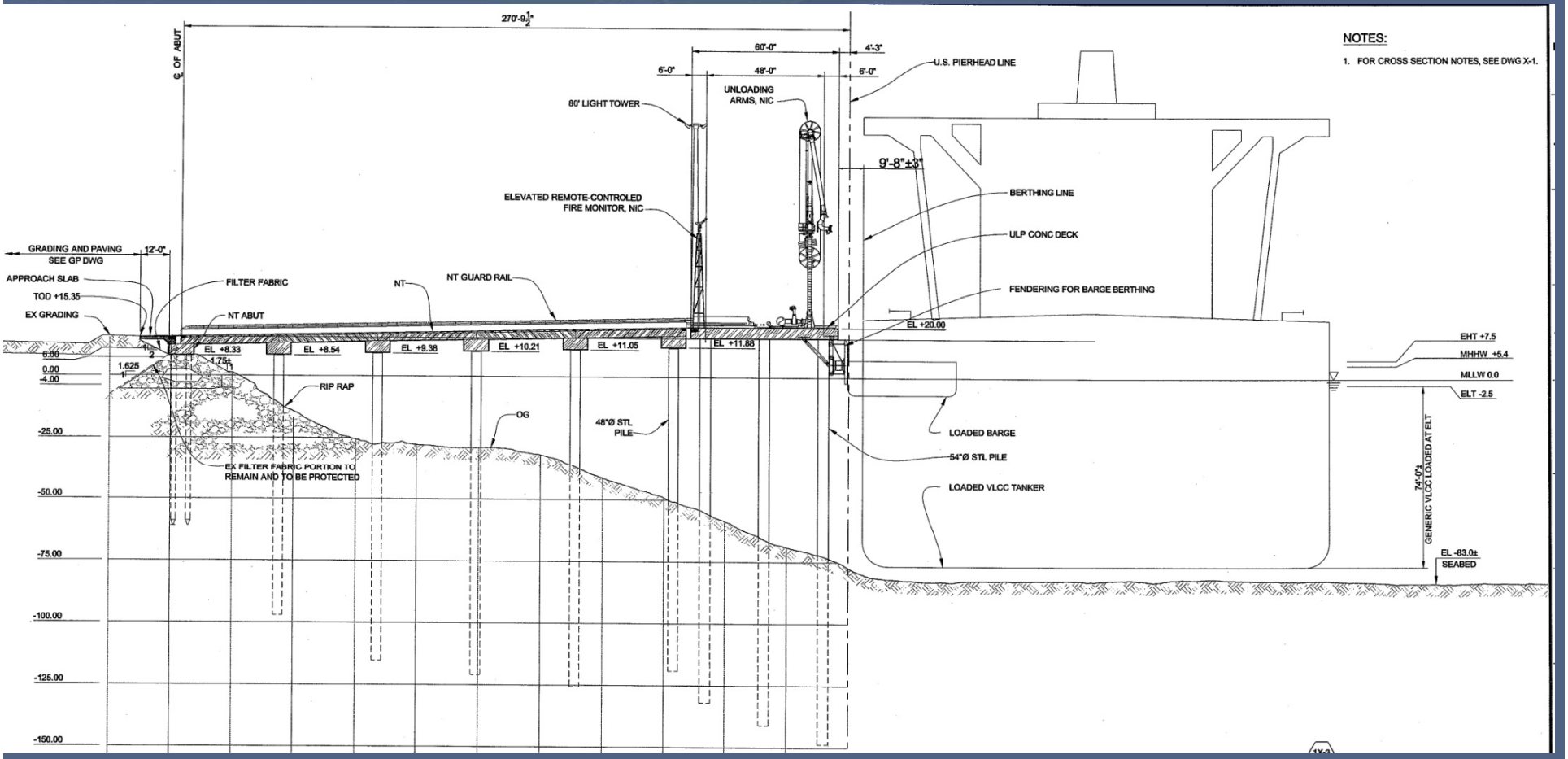

ULP with 12 - 54” Dia. Vertical Steel Piles & Cast-in-Place Concrete Deck

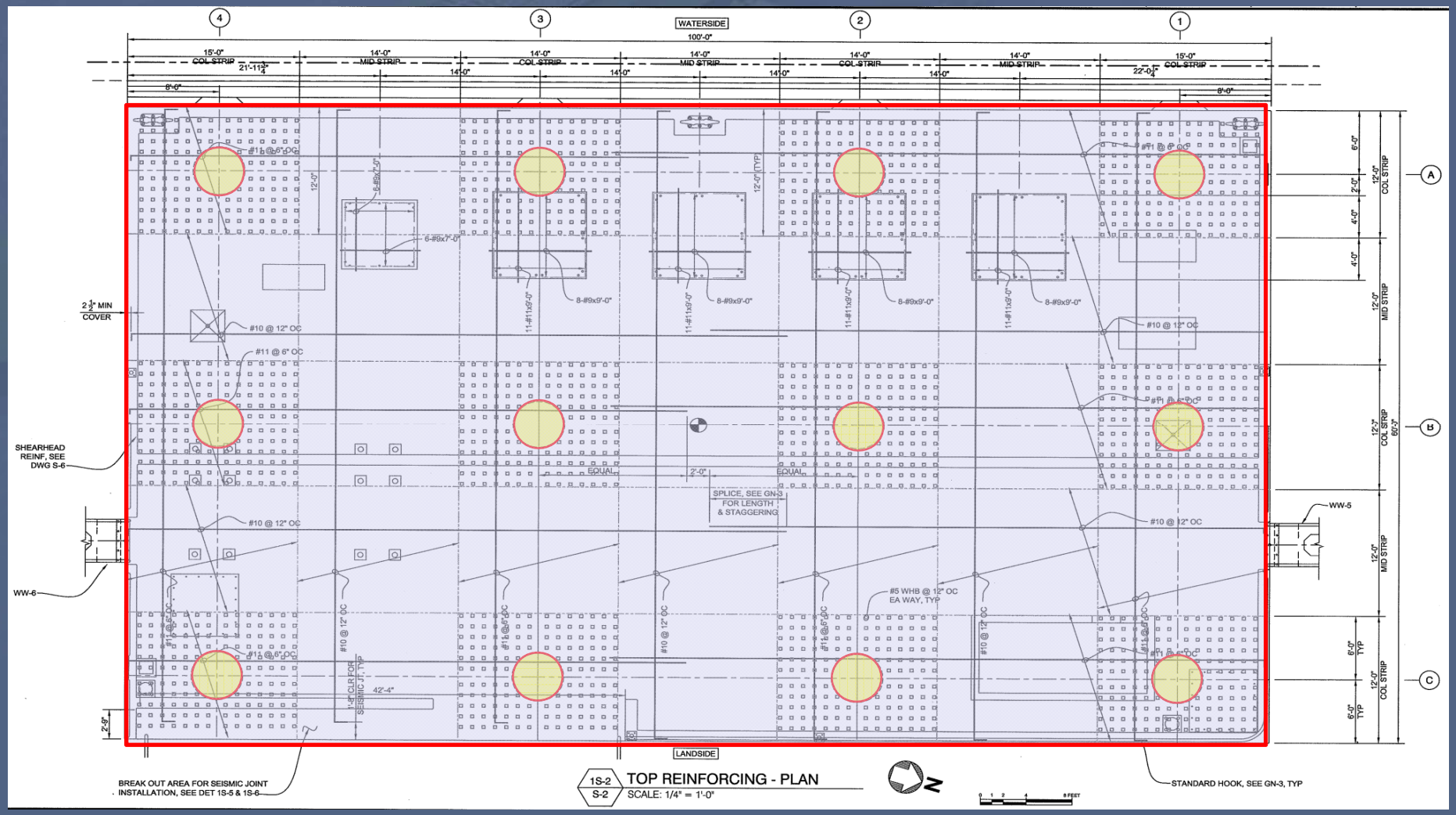

BD with 4 – 54” Dia. Vertical Steel Pipe Piles and CIP Concrete Deck

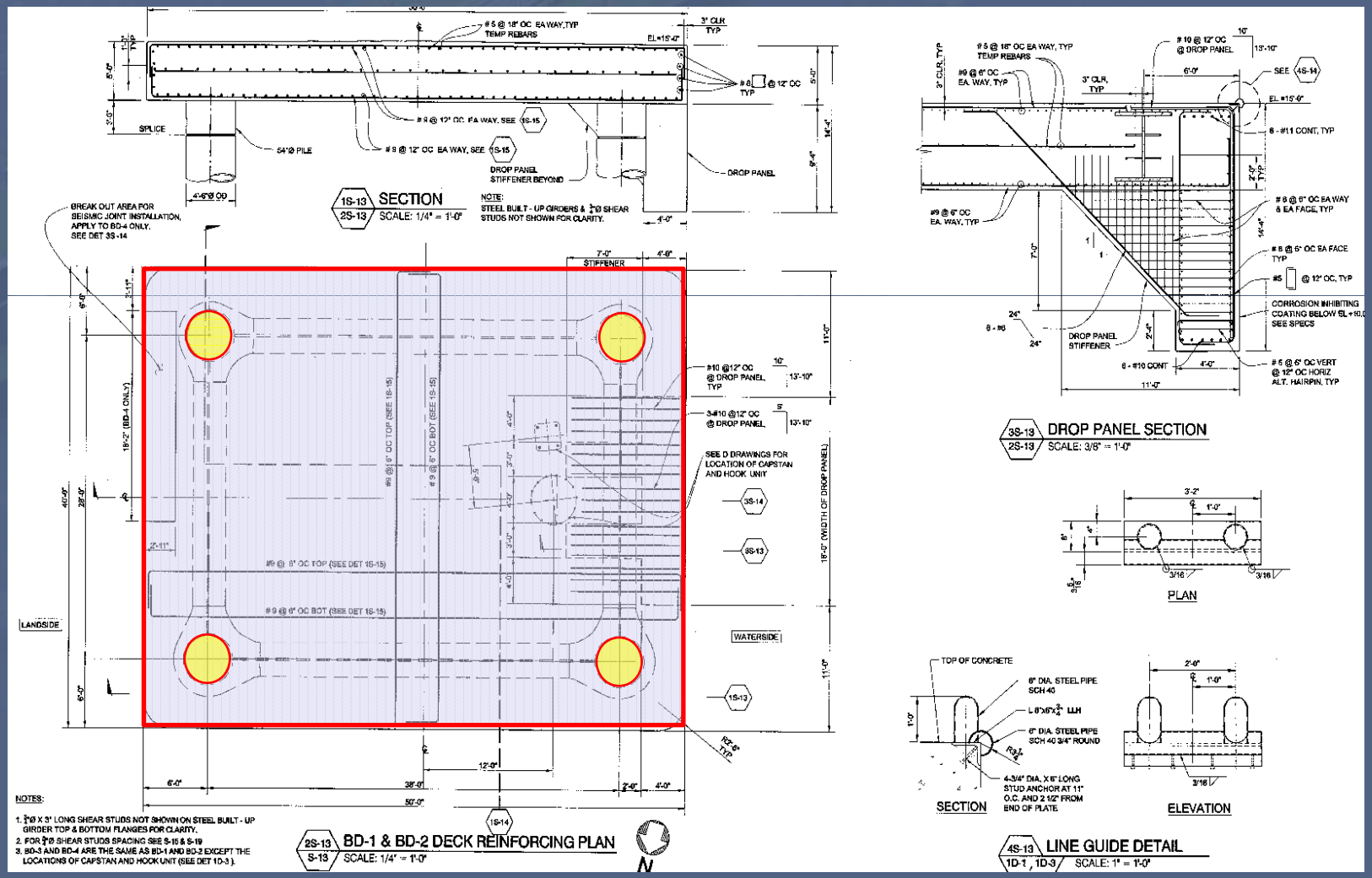

MD with 4 – 54” Dia. Vertical Steel Pipe Piles and CIP Concrete Deck

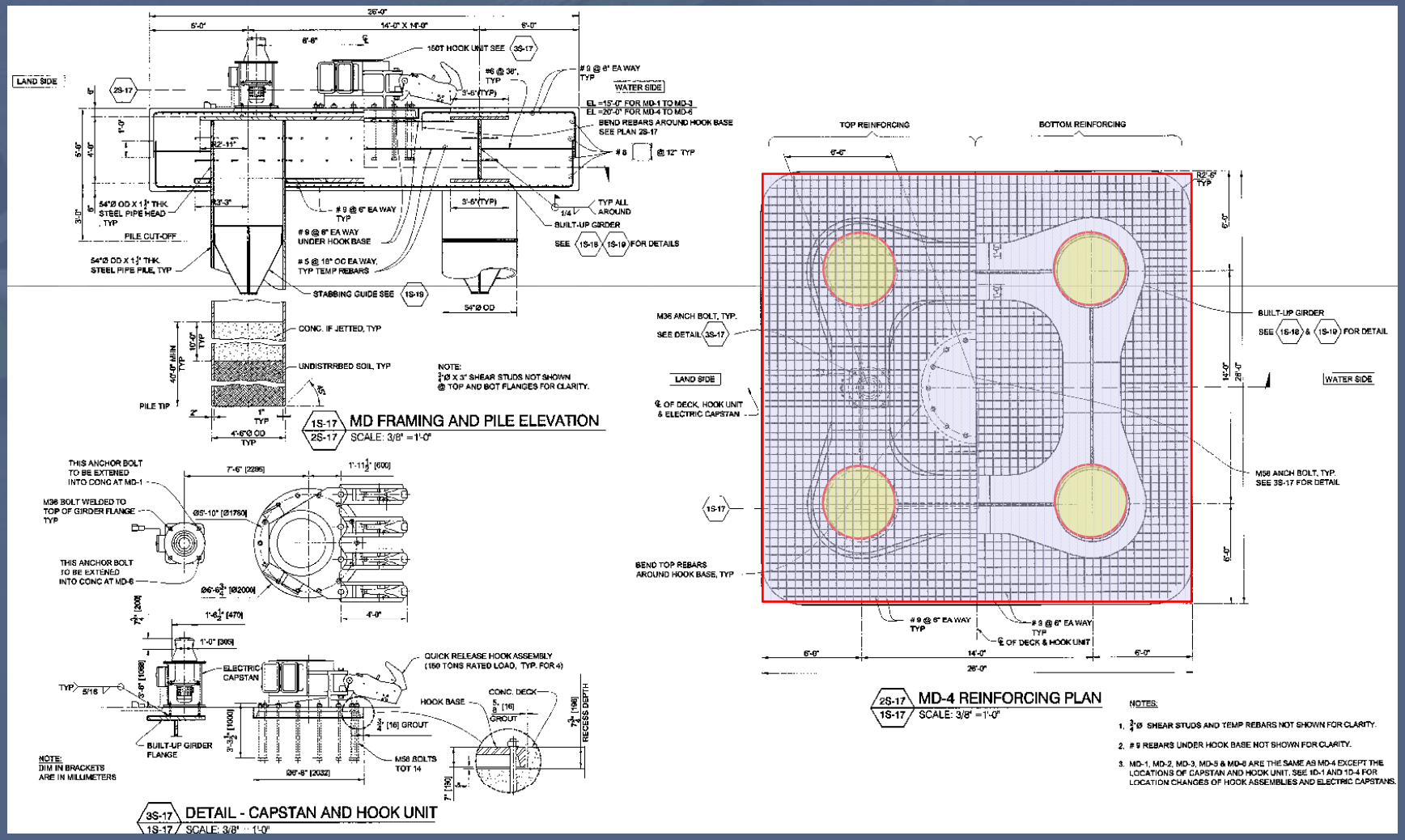

NT - CIP Concrete Deck Supported by Concrete Girders on 2-Pile Bents

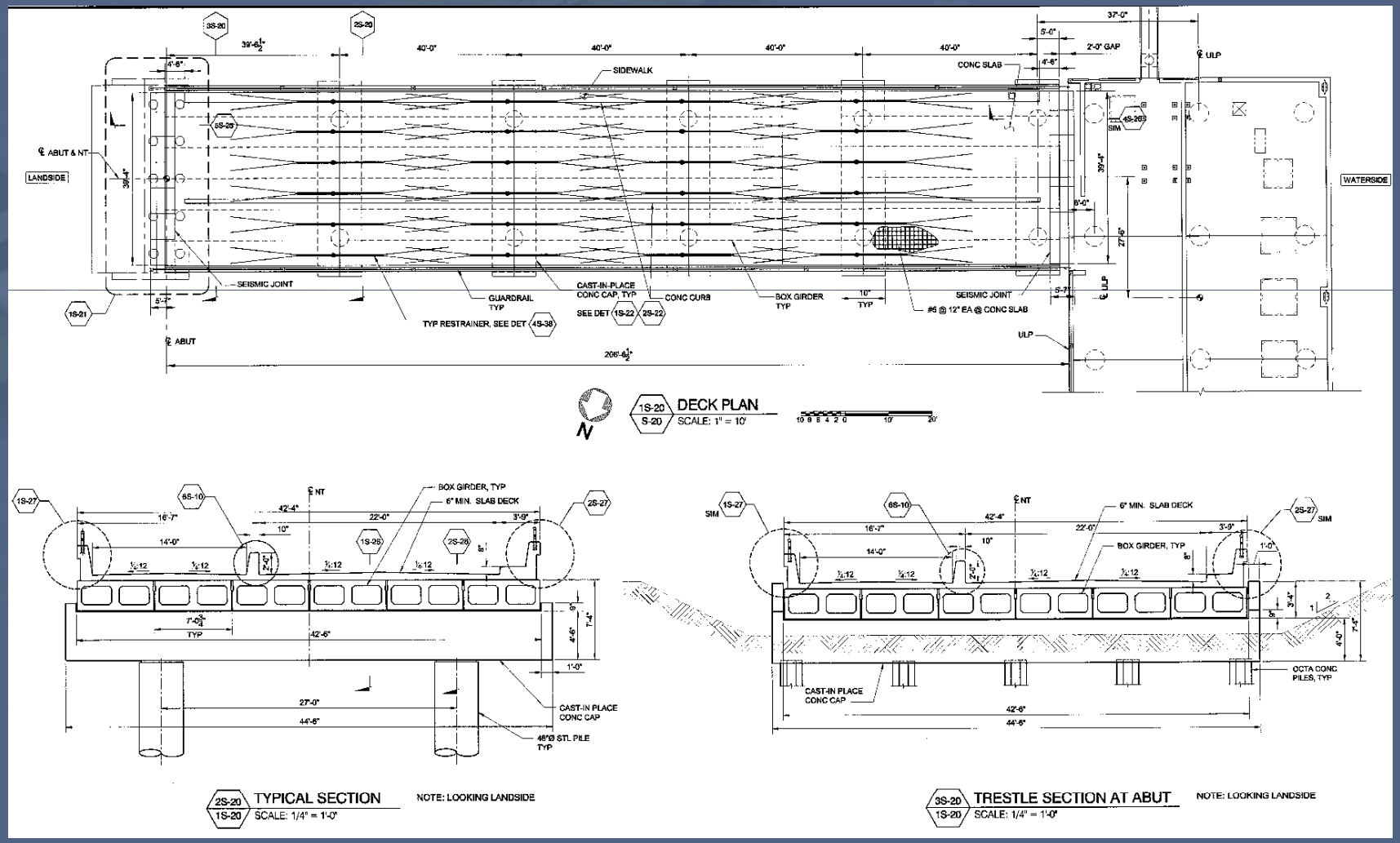

(48" Dia. Steel Piles) Spanning 40 Ft ST Similar

AMPP CIP Concrete Deck Supported by Concrete Girders on 2-Pile Bent

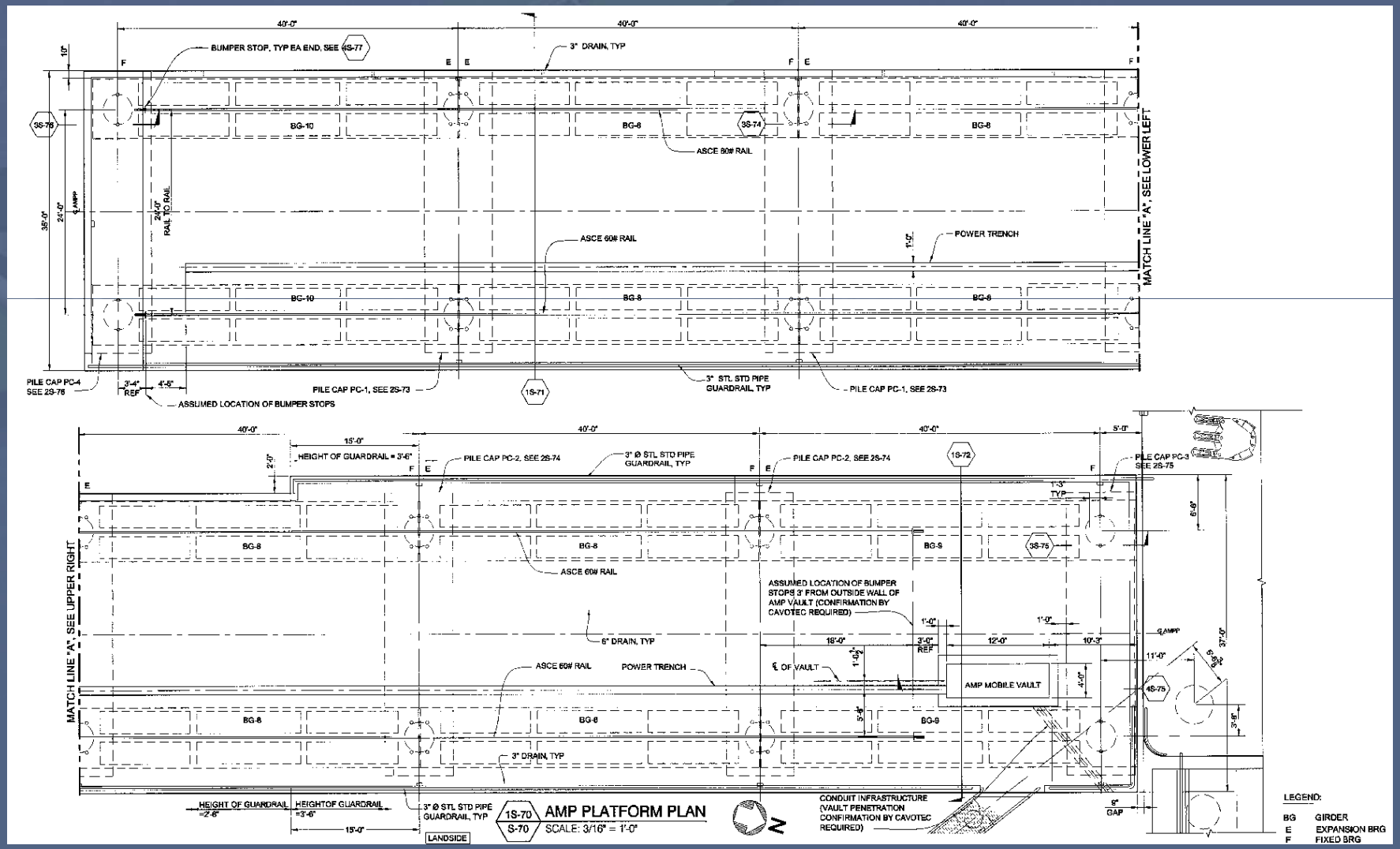

(14 - 48-inch Steel Piles) Spanning 40 Ft

Walkways Supported on Intermediate Pile Bents

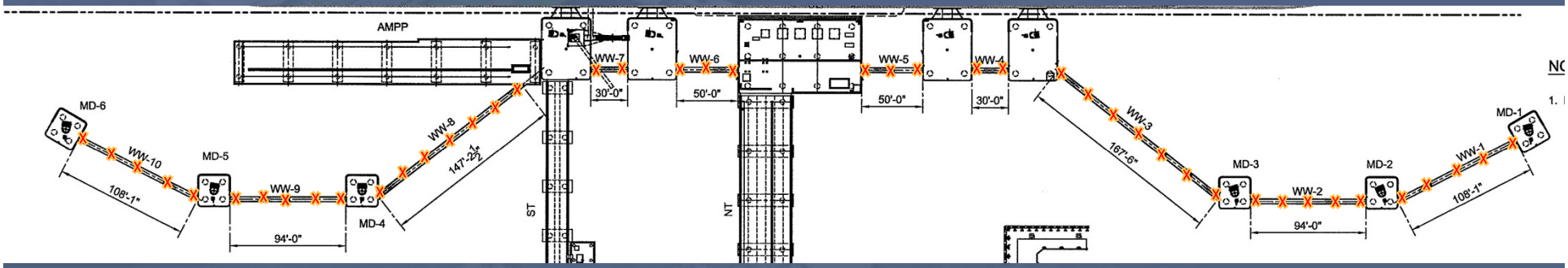

Note: Every "X" indicates the location of a 24" Octagonal Prestressed Pile to Support the WWs
Total No. of Piles Utilized = 44

VE Alternatives Studied

- *Components of POLA 100% Submittal*
- ***Components of Alternatives Evaluated***
  - *Similar use of vertical , large-dia. steel pipe piles (54" Dia.), but with **steel** decks for structures and trestles. Unloading platform (ULP) and trestles topped with precast concrete deck*
  - *Jacketed structures similar to offshore platforms (ULP, BDs, & MDs)*

VE Alternatives Studied (Cont'd)

- *Monopiles for the BDs & MDs and vertical piles for ULP*
- *Trestles (NT & ST) and AMP Platform (AMPP) components with precast concrete surfaces supported on steel girders at larger spans, resulting in reduced no. of piles*
- *Walkways capable of spanning from structure to structure, without intermediate piles*

Typical Jacketed Structures
Partial Height and Battered Legs

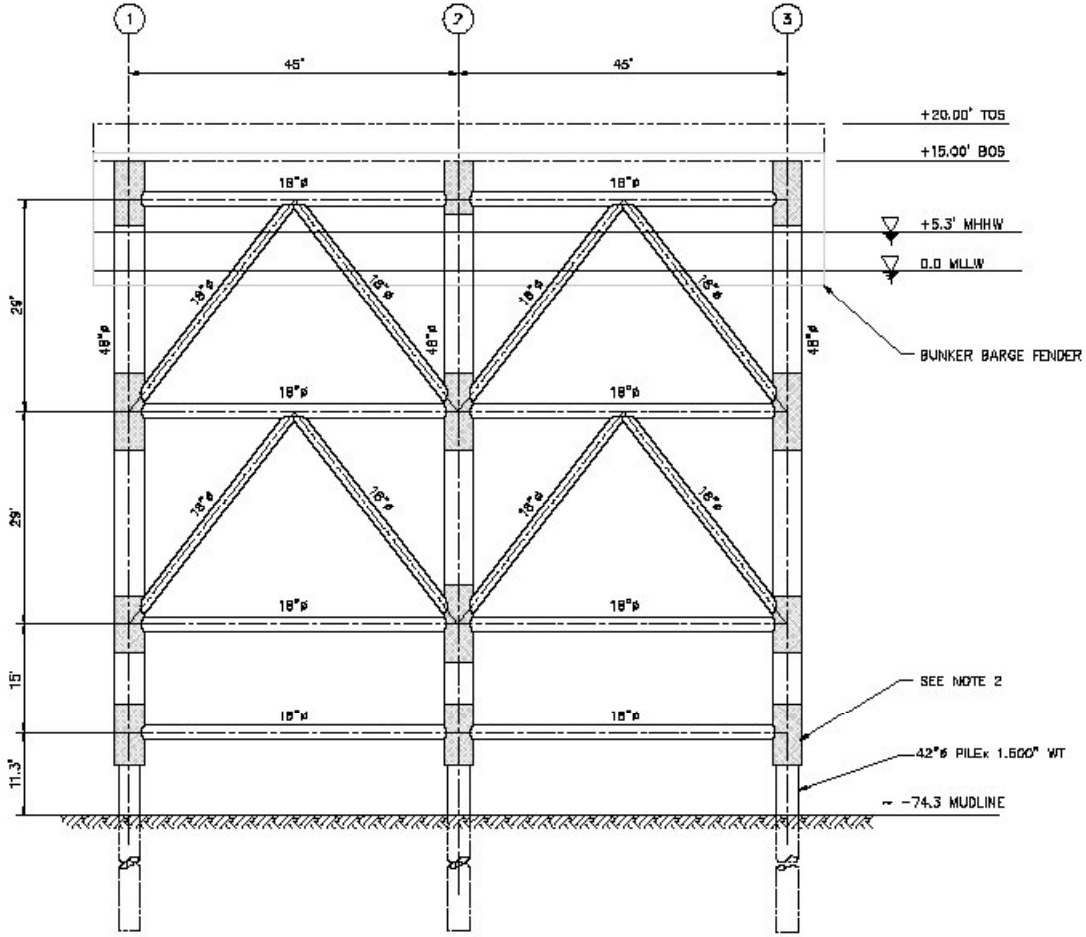

PLATFORM – FRONT ELEVATION
(REAR ELEVATION SIMILAR, UNO)

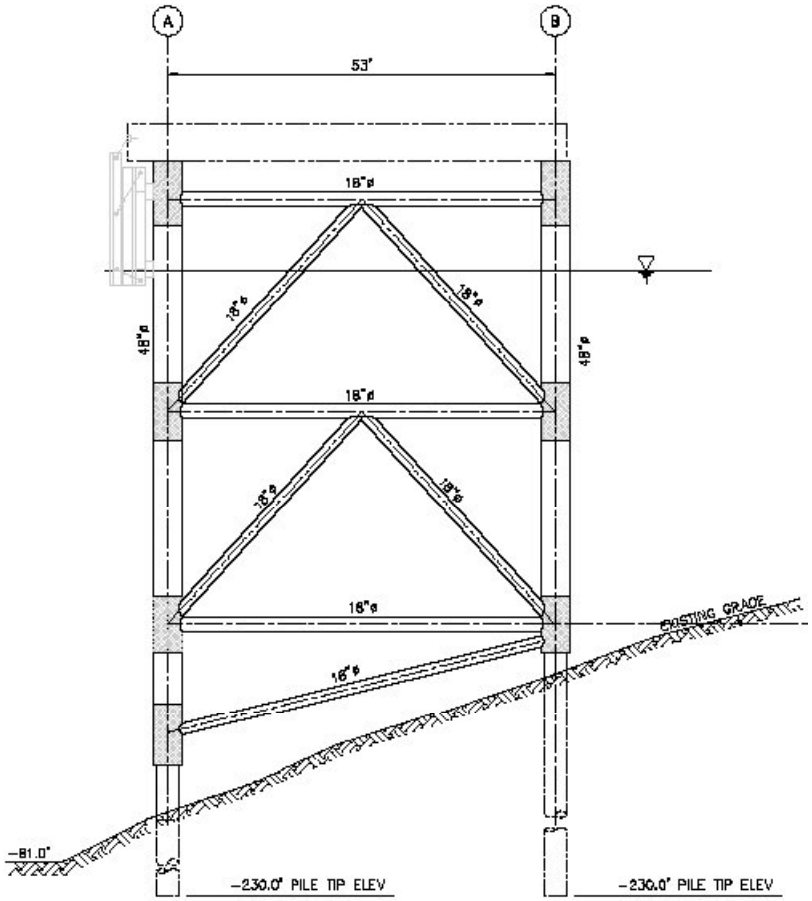

PLATFORM – SIDE ELEVATION

NOTES:

1. ALL PRIMARY

Typical Monopile Structure

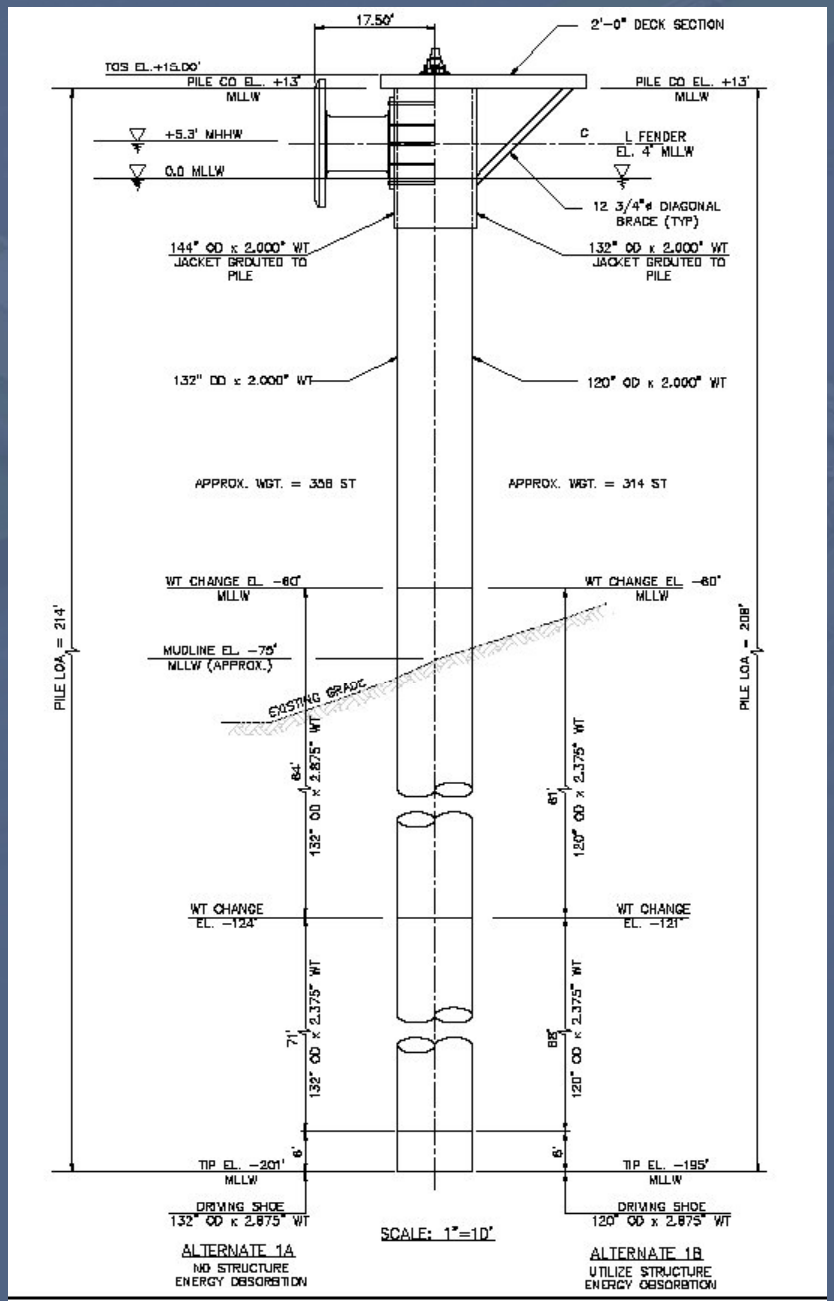

BD Monopile with Steel Deck

120" OD

Pile Wgt. – 314 ST

Pile Length – 208 Ft

Max. WT = 2.875"

Scenario Results

- *Components of POLA 100% Submittal*
- *Components of Alternatives Evaluated*
- ***Alternative Results***
  - *Scenario #1 - Vertical pile system with steel deck framing cost competitive and similar to POLA 100% Design*
  - *Scenario #2 - Jacketed structures also cost competitive, with large differences from POLA 100% Design*
    - ✓ *Jacket fabrication & installation not common on West coast*
    - ✓ *Differences may require re-evaluation of the approved EIR*

Scenario Results (Cont'd)

- *Scenario #3 - Monopile BDs & MDs very cost competitive, but even larger differences from POLA 100% Design*
  - ✓ *Monopile fabrication & installation not common on West coast*
  - ✓ *Differences may require re-evaluation of the approved EIR*

Scenario Results (Cont'd)

- *Components of POLA 100% Submittal*
- *Components of Alternatives Evaluated*
- ***Scenario Results***

Scenario No.	Est. Total Const. Cost (% Base Case)	Comparision to Base Case
POLA 100% Design - Base Case	100%	
Scenario #1	91%	Similar
Scenario #2	91%	Large configuration differences below deck (Jacket Fab. & Installation)
Scenario #3	88%	Very large configuration differences below deck (Monopile fab. & installation)

Scenario Results (Cont'd)

- *Components of POLA 100% Submittal*
- *Components of Alternatives Evaluated*
- *Scenario Results*
- ***Move forward with detailed comparisons of POLA 100% Design and Scenario #1 for the following reasons:***
  - *Potential savings in construction cost*
  - *Reduction in the no. of piles and minimal CIP concrete*
    - ✓ *Minimize risk issues with driving through rock lenses*
    - ✓ *Reduced construction time in the field*

Details of Scenario #1

General Arrangement

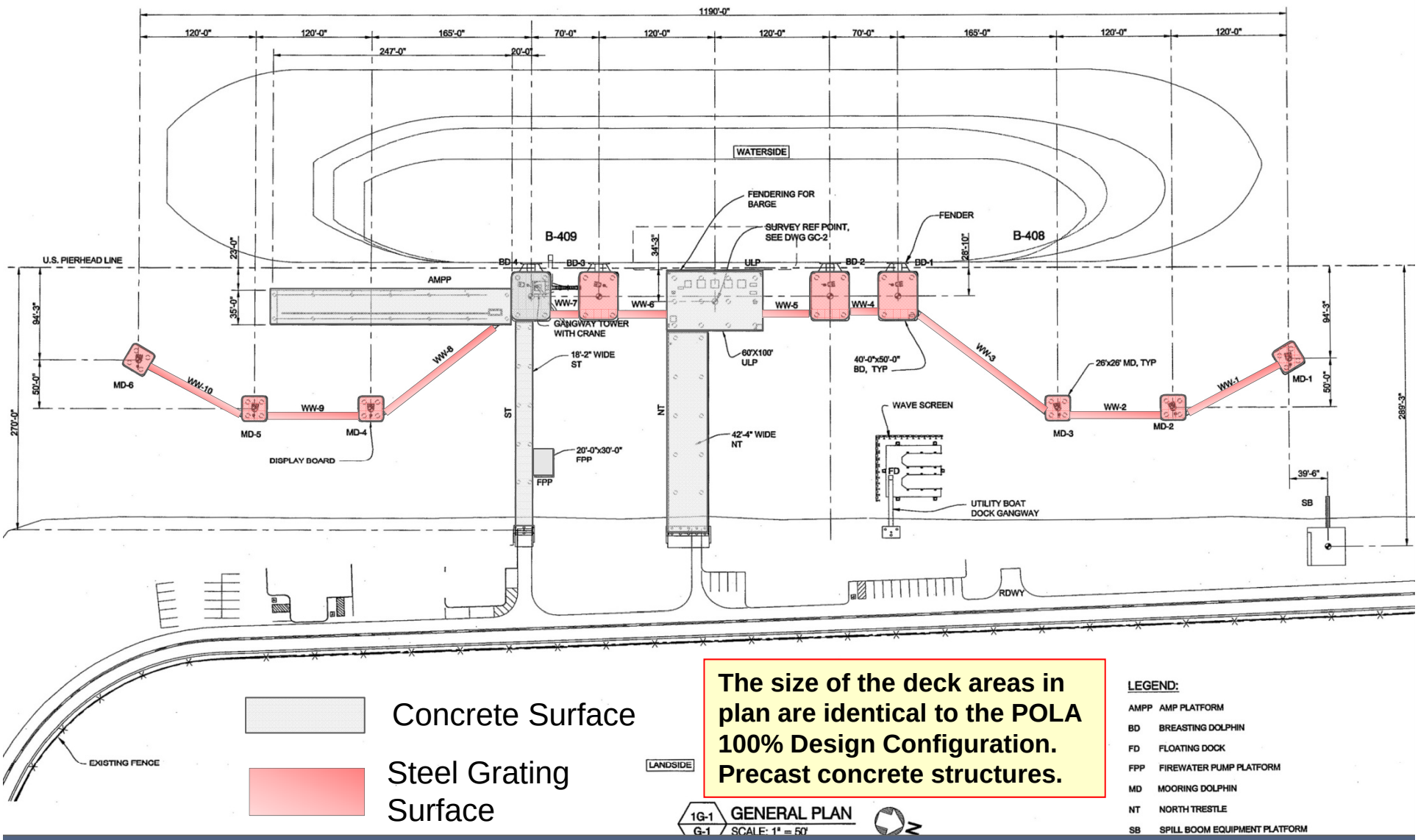

Concrete Surface

Steel Grating Surface

The size of the deck areas in plan are identical to the POLA 100% Design Configuration. Precast concrete structures.

ULP Deck Framing Plan

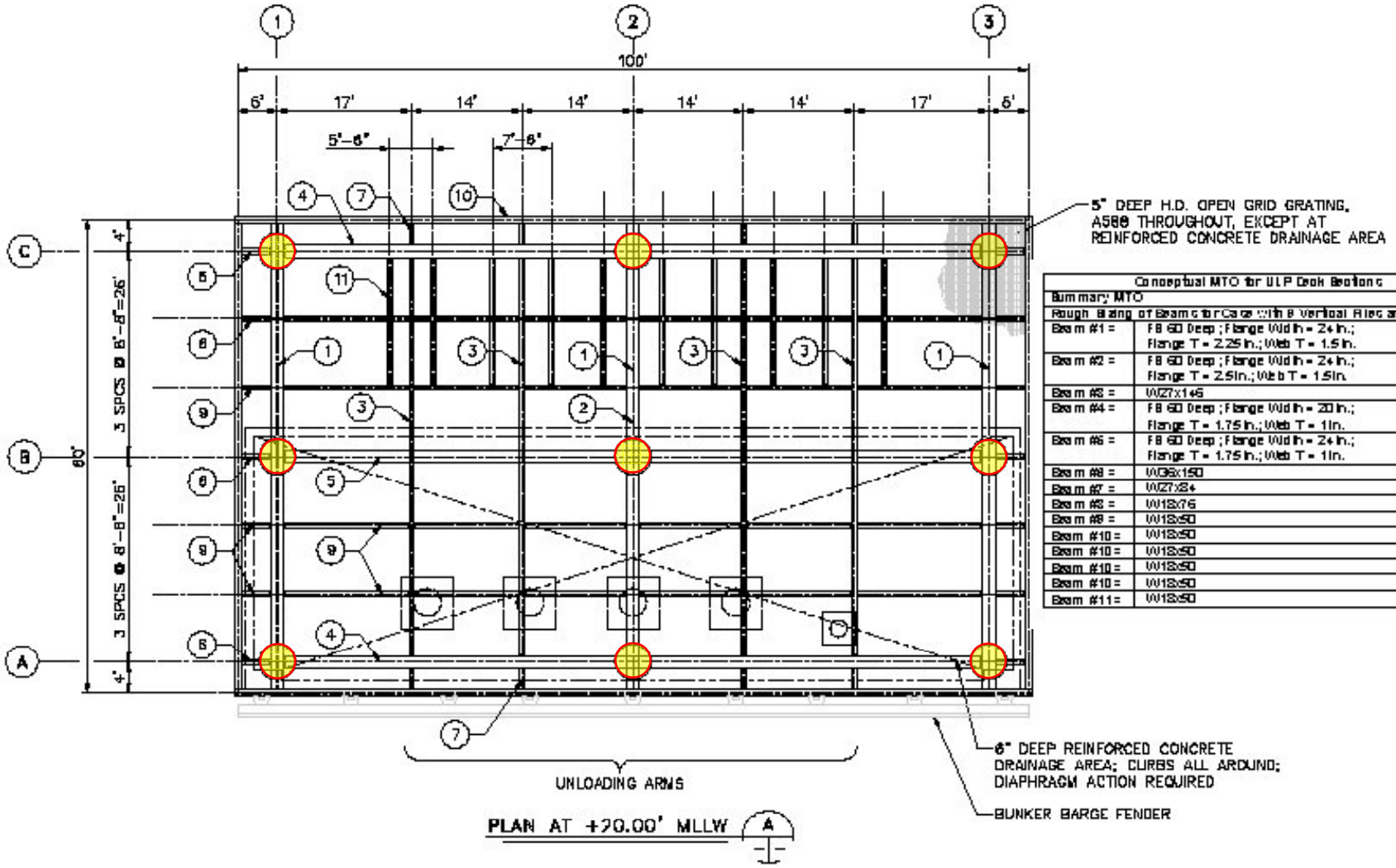

Conceptual MTO for ULP Deck Beams	
Summary MTO	
Rough Sizing of Beams for Case with 8 Vertical Ribs and No Jacket	
Beam #1 =	FB 60 Deep ; Flange Width = 24 in.; Flange T = 2.25 in.; Web T = 1.5 in.
Beam #2 =	FB 60 Deep ; Flange Width = 24 in.; Flange T = 2.5 in.; Web T = 1.5 in.
Beam #3 =	W27x146
Beam #4 =	FB 60 Deep ; Flange Width = 20 in.; Flange T = 1.75 in.; Web T = 1 in.
Beam #5 =	FB 60 Deep ; Flange Width = 24 in.; Flange T = 1.75 in.; Web T = 1 in.
Beam #6 =	W36x150
Beam #7 =	W27x84
Beam #8 =	W18x76
Beam #9 =	W18x50
Beam #10 =	W18x50
Beam #10 =	W18x50
Beam #10 =	W18x50
Beam #10 =	W18x50
Beam #11 =	W18x50

Breasting Dolphin

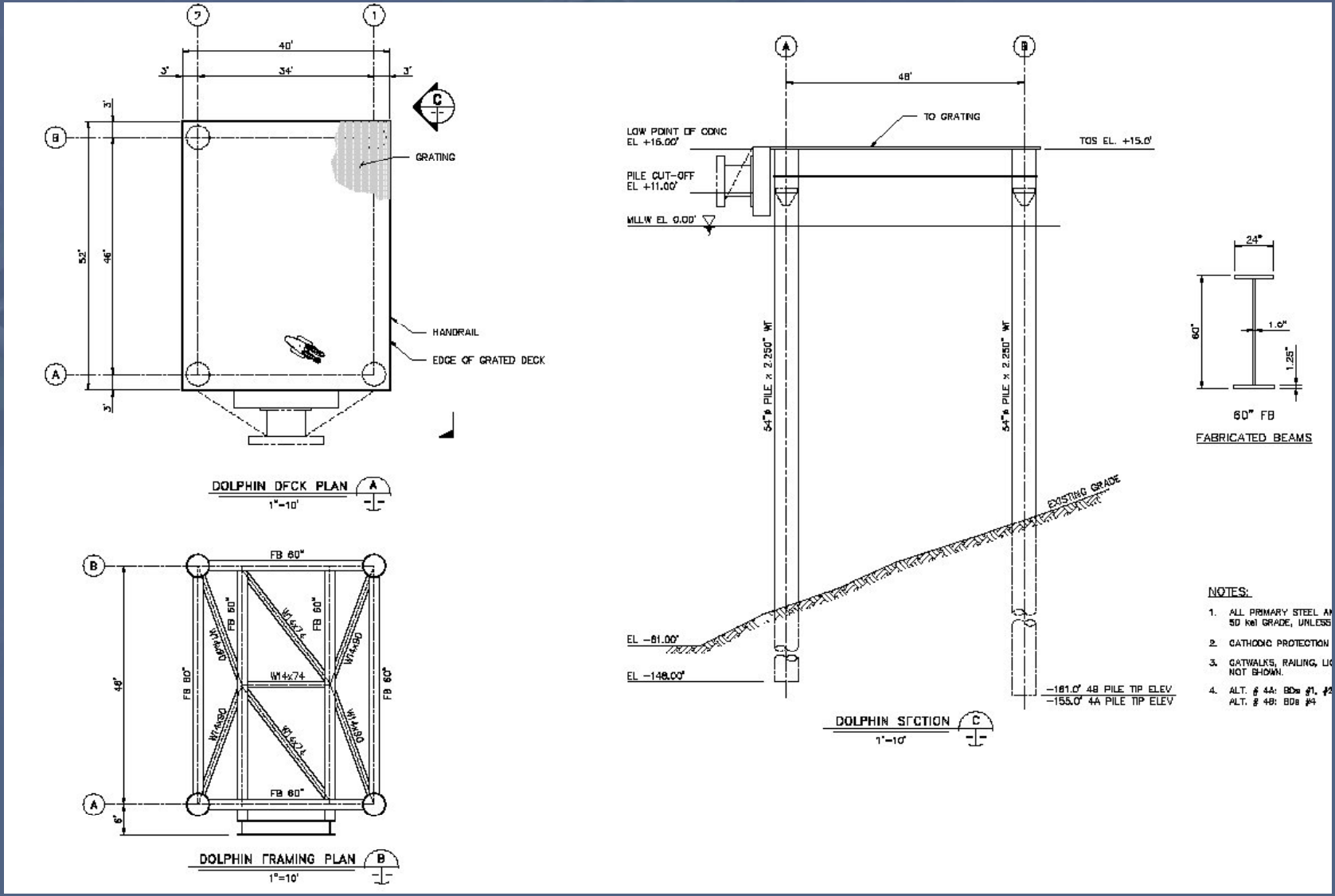

Mooring Dolphin

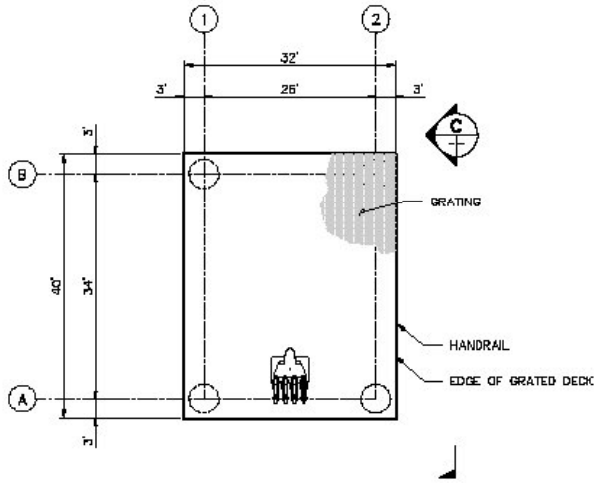

DOLPHIN DECK PLAN (A)
1"=10'

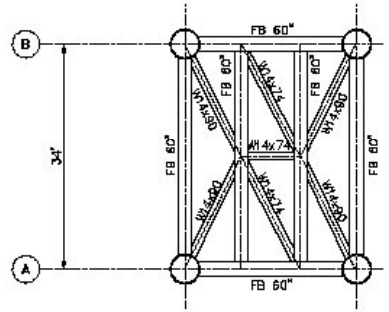

DOLPHIN FRAMING PLAN (B)
1"=10'

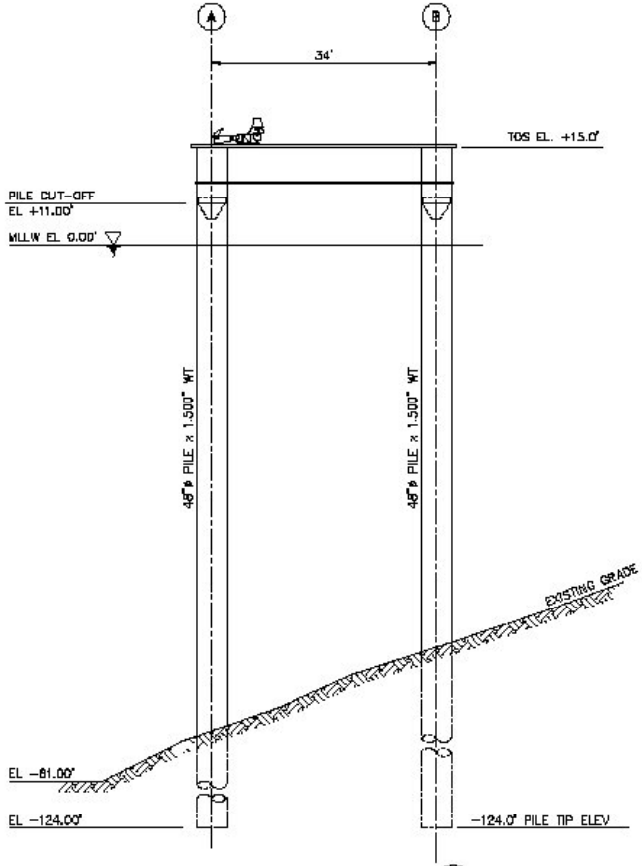

DOLPHIN SECTION (C)
1"=10'

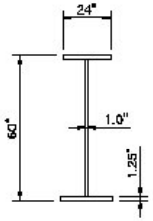

60" FB
FABRICATED BEAMS

NOTES:

1. ALL PRIMARY S
50 ksi GRADE.
2. CATHODIC PRO
3. CATWALKS, RAI
NOT SHOWN.

Section thru North Trestle
South Trestle Similar

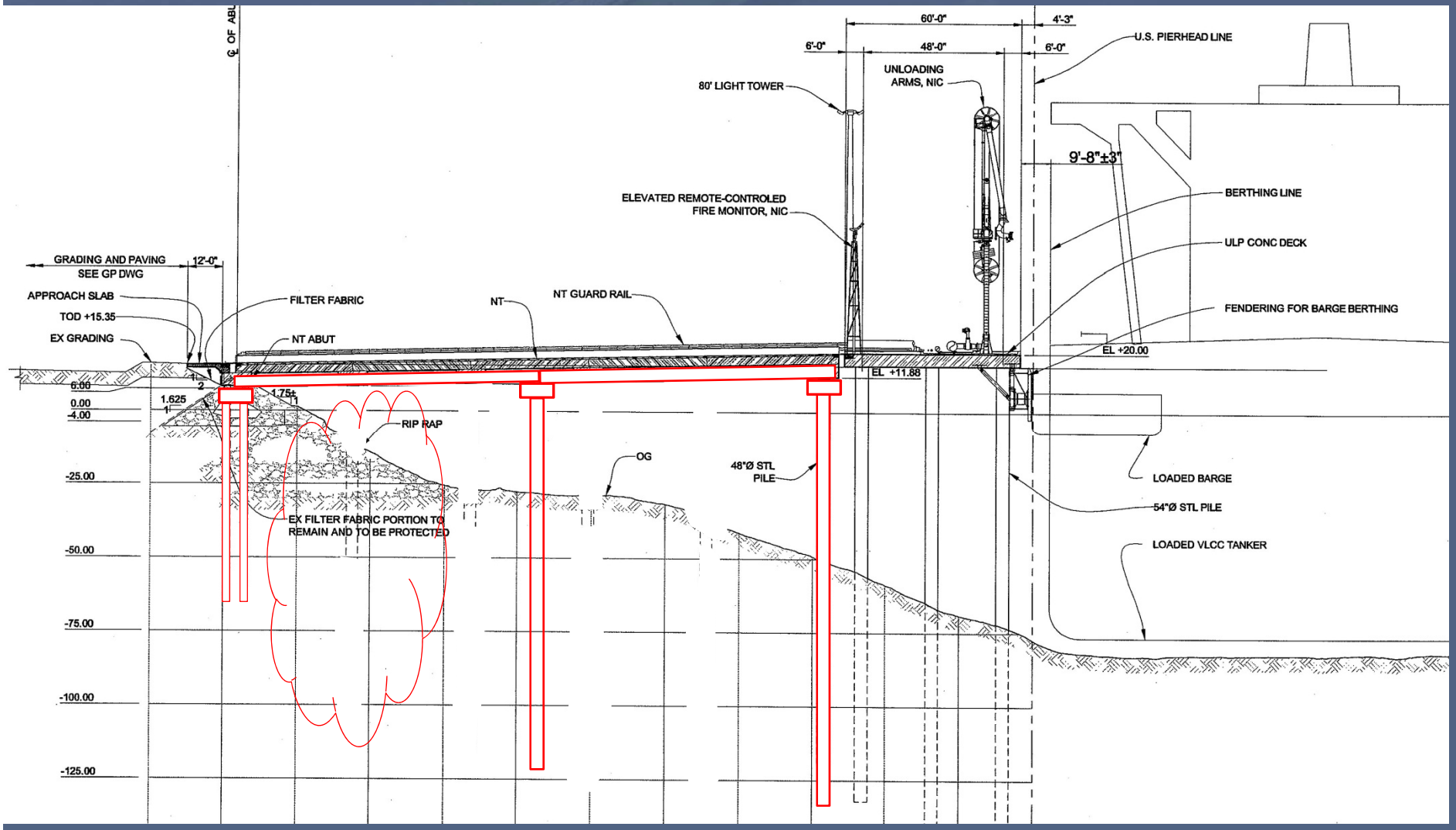

Section thru AMP Platform

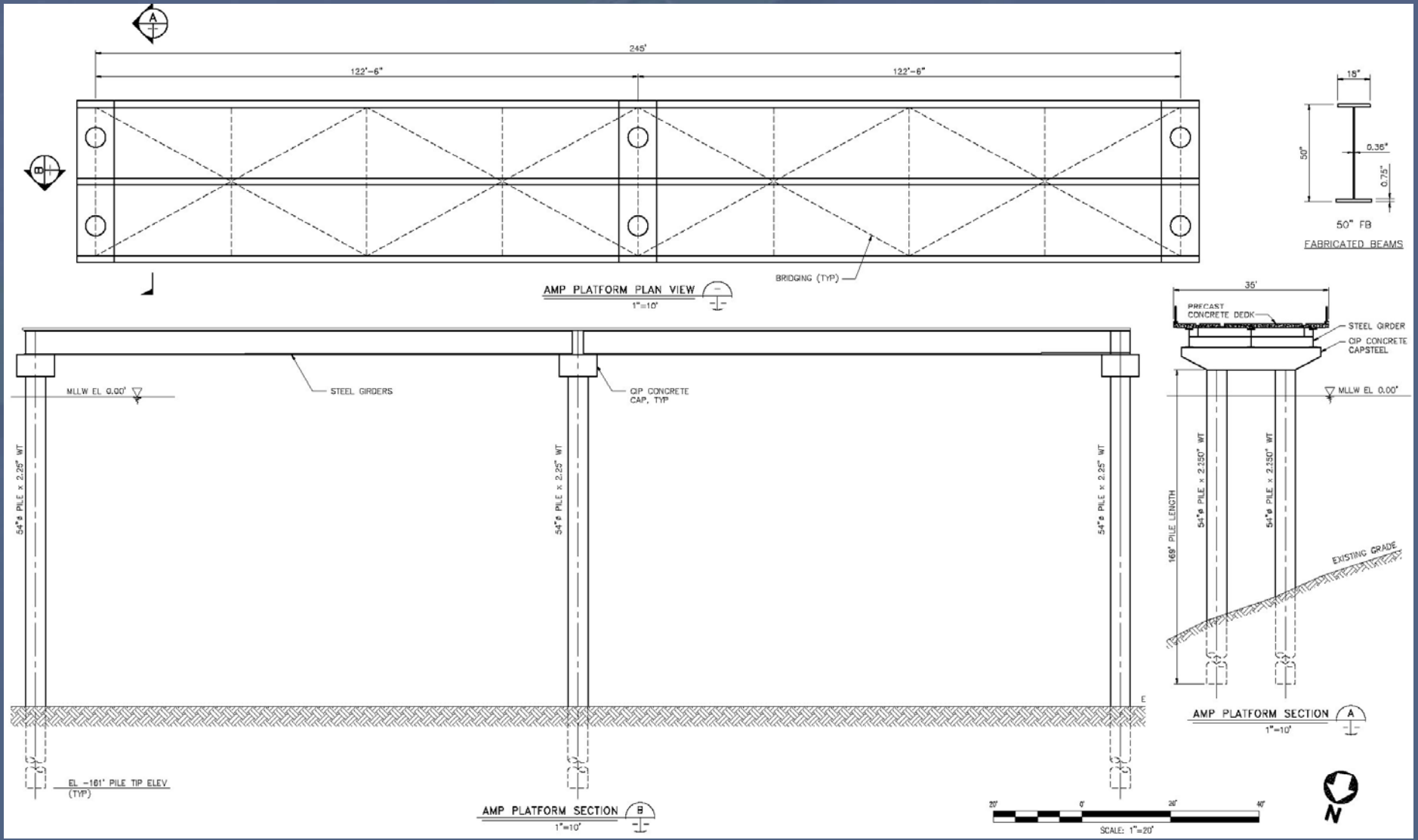

Walways Spanning from Dolphin to Dolphin Utilizing Large Dia. Pipe

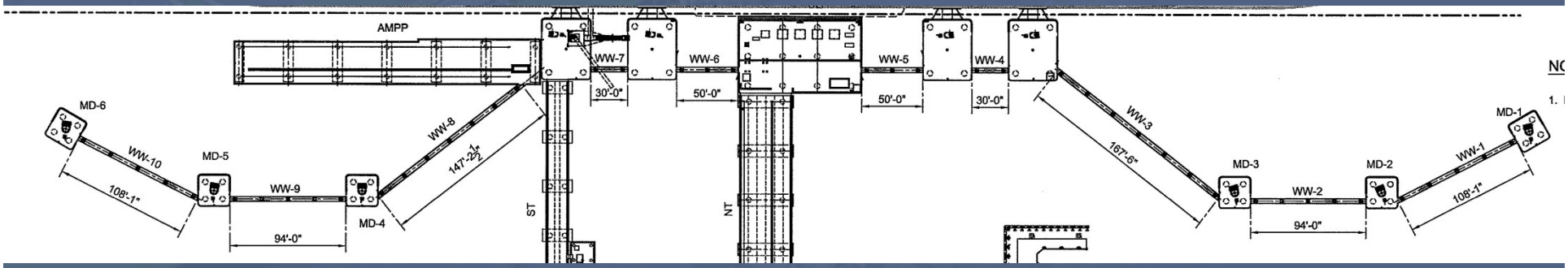

Note: No intermediate piles supporting the walkways. Total No. of Piles Eliminated = 44

Results and Comparisons

Concept Comparisons

Construction Component	POLA 100% Design	Scenario #1
Steel Piles (48” & 54” Dia.)	86	61
Concrete Piles (24” Oct. PCP)	75	31
Decks – ULP; BDs; & MDs	Cast-in-Place (CIP) Concrete	ULP – Steel Deck with precast concrete Panels; BDs & MDs – Steel Deck with Grated Surfaces
Decks – Trestles (NT; ST; & AMP Platform)	Pile Caps – CIP Concrete Beams – Precast Box Girders Deck – CIP Concrete	Pile Caps – CIP Concrete Beams – Steel Fabricated Beams Deck – Precast Concrete Panels
Life Cycle Maintenance Cost	Lower than Scenario #1	Higher than POLA 100% Design
Utility Boat Dock; Firewater Pump & Spill Boom Plat.	Presently, Scenario #1 will be identical to the POLA 100% Design	

Schedule Comparisons

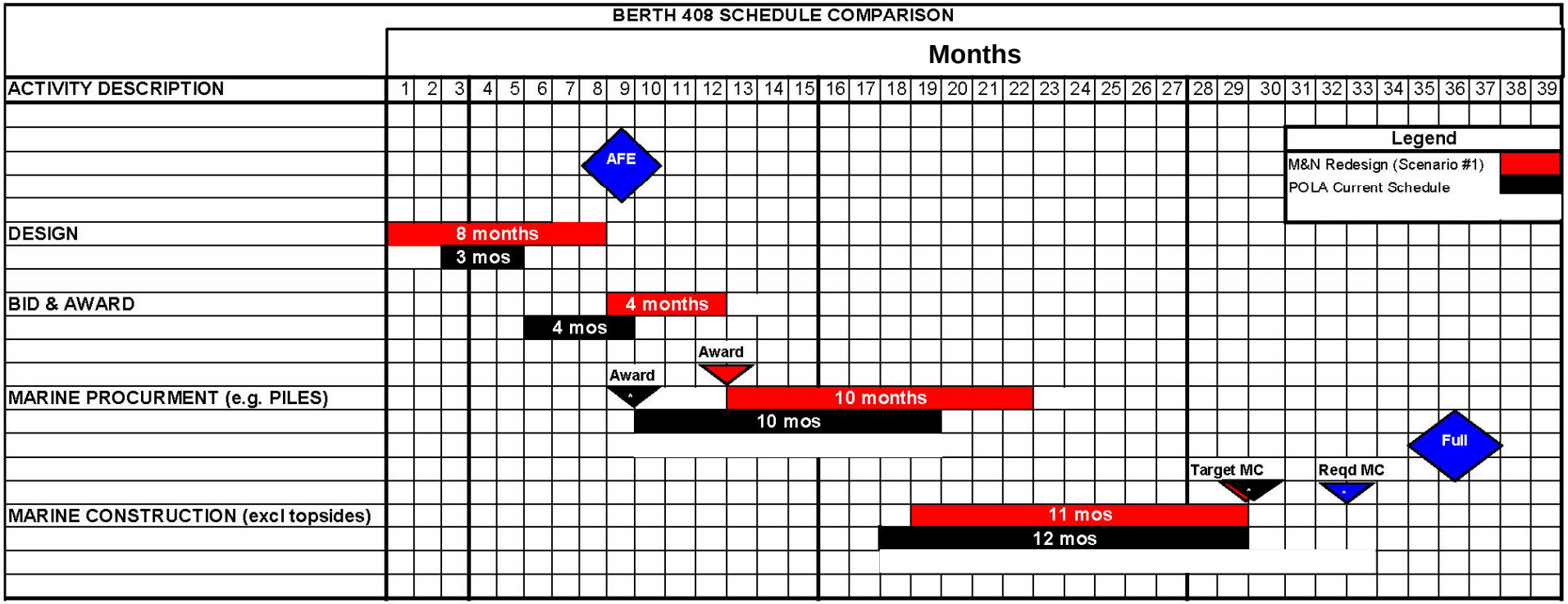

- Scenario #1 requires more time for re-design
- POLA 100% Design concept requires more field time (more piles and more CIP concrete)
- Presently, the marine construction package is not on the critical path for the start-up of the facility
- **At this time, there are no strong drivers to select one concept over the other, based on schedule**

Pile Driving Risk Identified by POLA

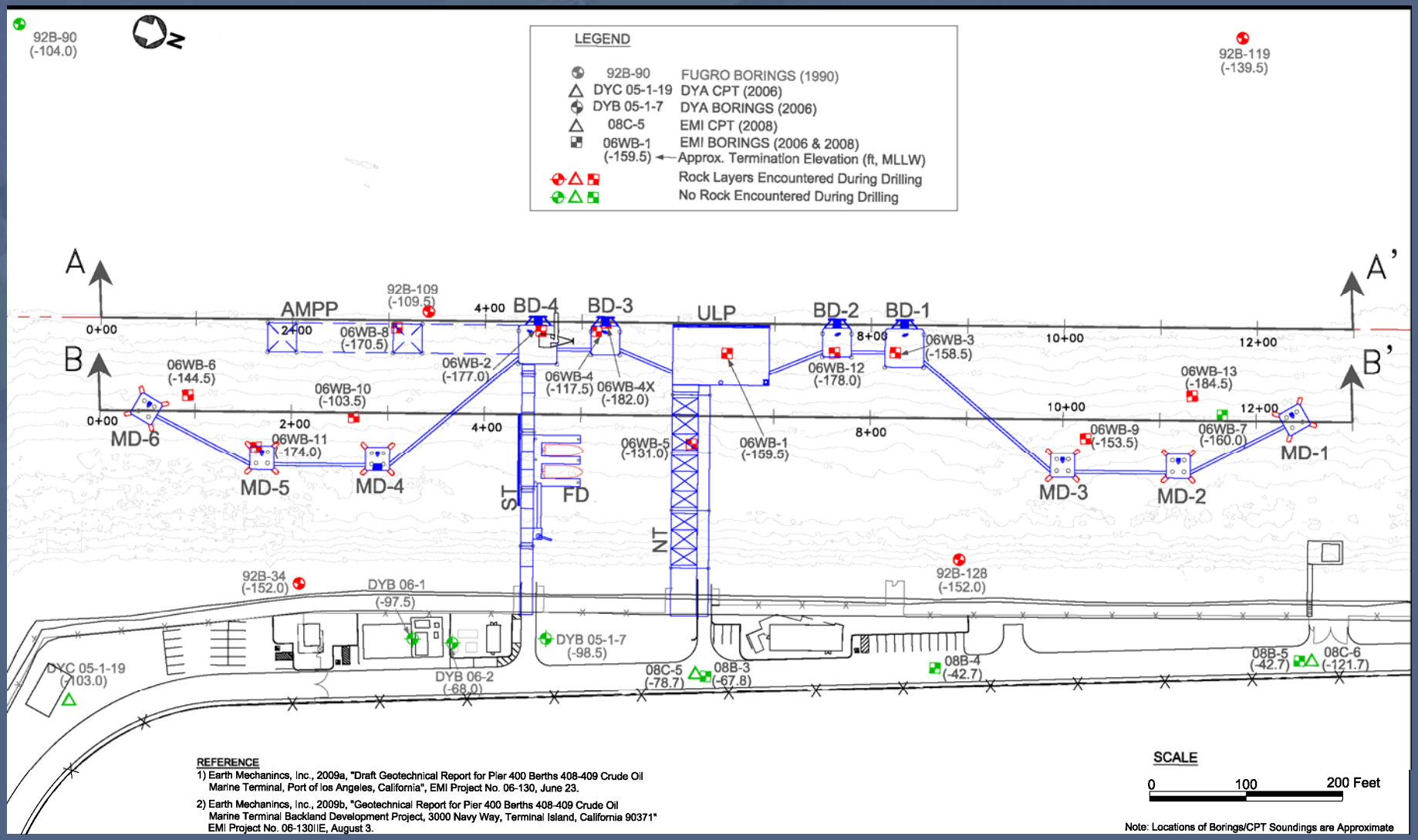

Pile Driving Risk Identified by POLA

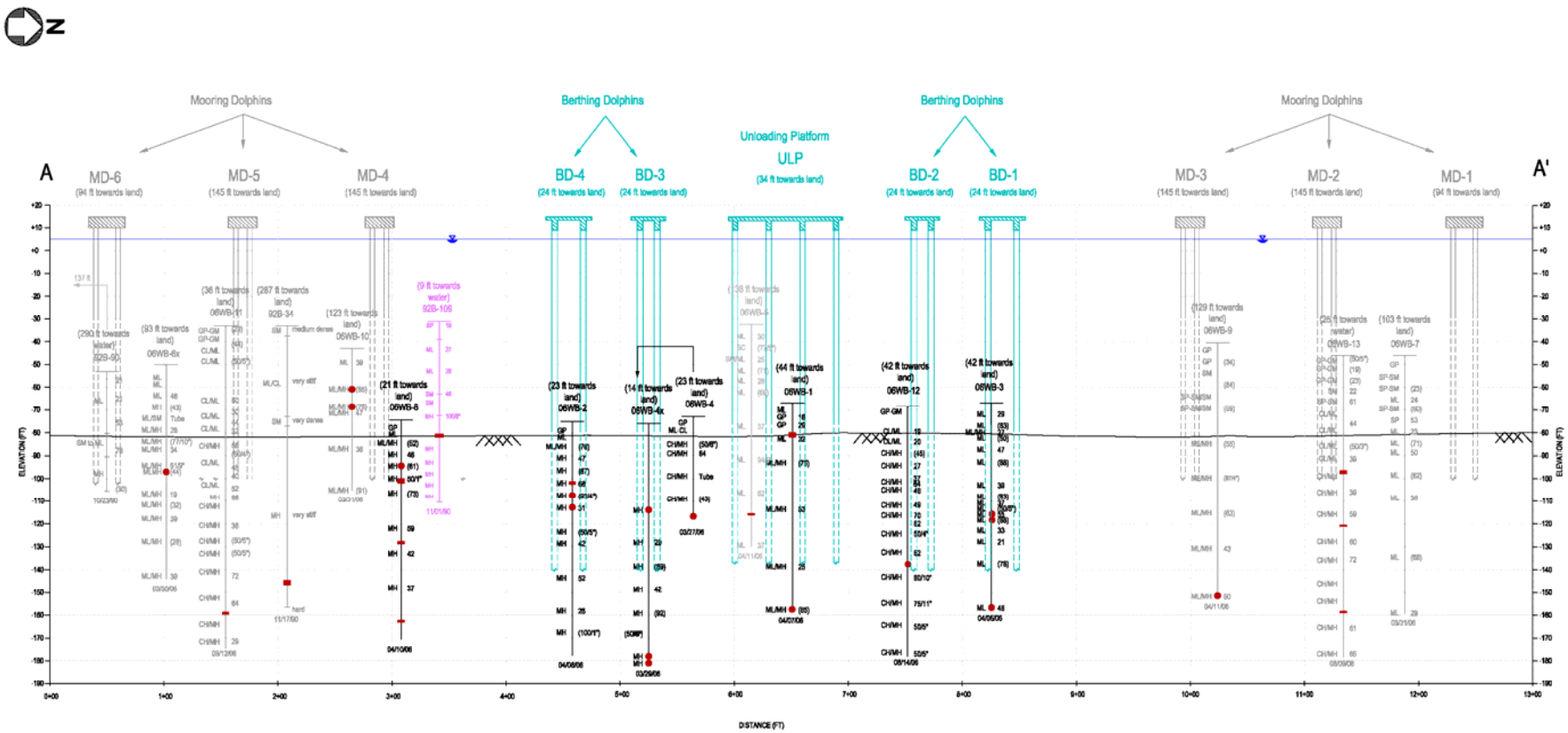

Longitudinal Section A –A'

Risk Mitigation Strategy

Risk Mitigation	Purpose/Benefit	POLA 100% Design	Scenario #1
Design Stiffer Steel Piles	Deliver energy to pile tip to penetrate rock lens (min. WT = 1.50”)	✓	✓
Reduce the No. of Steel Piles Driven	Simply reduces the no. of opportunities to hit rock lenses	86	61 29% Reduction
Reduce the No. of Prestressed Concrete Piles Driven	Simply reduces the no. of opportunities to hit rock lenses	75	31 59% Reduction

Next Steps

Next Steps

- PLAMT in negotiations with POLA for long-term lease
- PLAMT in negotiations with their customers to lock in the business drivers for this capital investment
- **If and when those 2 hurdles are cleared, the final design and construction phases will move forward**

Questions?