U.S. Department of Transportation
United States Coast Guard

Commanding Officer
United States Coast Guard
Marine Safety Center

400 7th Street, S.W.
Washington, DC 20590-0001
Staff Symbol: MSC-3
Phone: (202) 366-6441
FAX: (202) 366-3877

16710/P005081
16710/ZIDE 601
Serial: C1-9900344
February 2, 1999

DATE: 2/17/99
RECEIVED BY: Jack Wilskey
ISSUED TO: Jeff Browning - Original
VESSEL:
SOMAR: Steve Hoisington & Engineering
COOS BAY: File
PORTLAND: Noelle
HONOLULU:

Mr. R. Charles Barrett
Elliott Bay Design Group
5301 Shilshole Avenue Northwest, Suite 200
Seattle, Washington 98107

Subj: SIUSLAW, O.N. 580276
Zidell Explorations, Inc. Hull 601
241'-3" x 60' x 16' Unmanned Deck Cargo Barge (I)
Oceans
Stability

Ref: (a) Your letter dated December 16, 1998
(b) Navigation and Vessel Inspection Circular (NVIC) 10-92, Change 1, "Coast Guard Recognition of Registered Professional Engineer Certification of Compliance with Coast Guard Requirements"
(c) Letter 16711/V-8484-77, dated March 21, 1977

Dear Mr. Barrett:

We have the information submitted with reference (a), the stability calculation to increase the cargo vertical center of gravity (CVCG). Enclosure (1) is marked **"Approved"** under the oversight provisions of reference (b).

The approved lightweight characteristics for this vessel and used in the stability calculations are as follows:

Displacement	796.0	Long Tons
VCG	9.6	Ft Above the Baseline
LCG	119.6	Ft Aft of FP

By copy of this letter, American Bureau of Shipping (ABS) Americas is advised that the stability for the SIUSLAW, O.N. 580276 is satisfactory for a molded draft to the summer load line waterline of 12 feet, 11-3/4 inches. ABS Americas is directed to place the following statement on the face of the Load Line Certificate:

"This certificate is valid only so long as the operating restrictions in SIUSLAW's stability letter, issued by the USCG Marine Safety Center and dated February 2, 1999, are observed."

RECEIVED
48140
FEB 11 1999
ELLIOTT BAY
DESIGN GROUP, LTD.

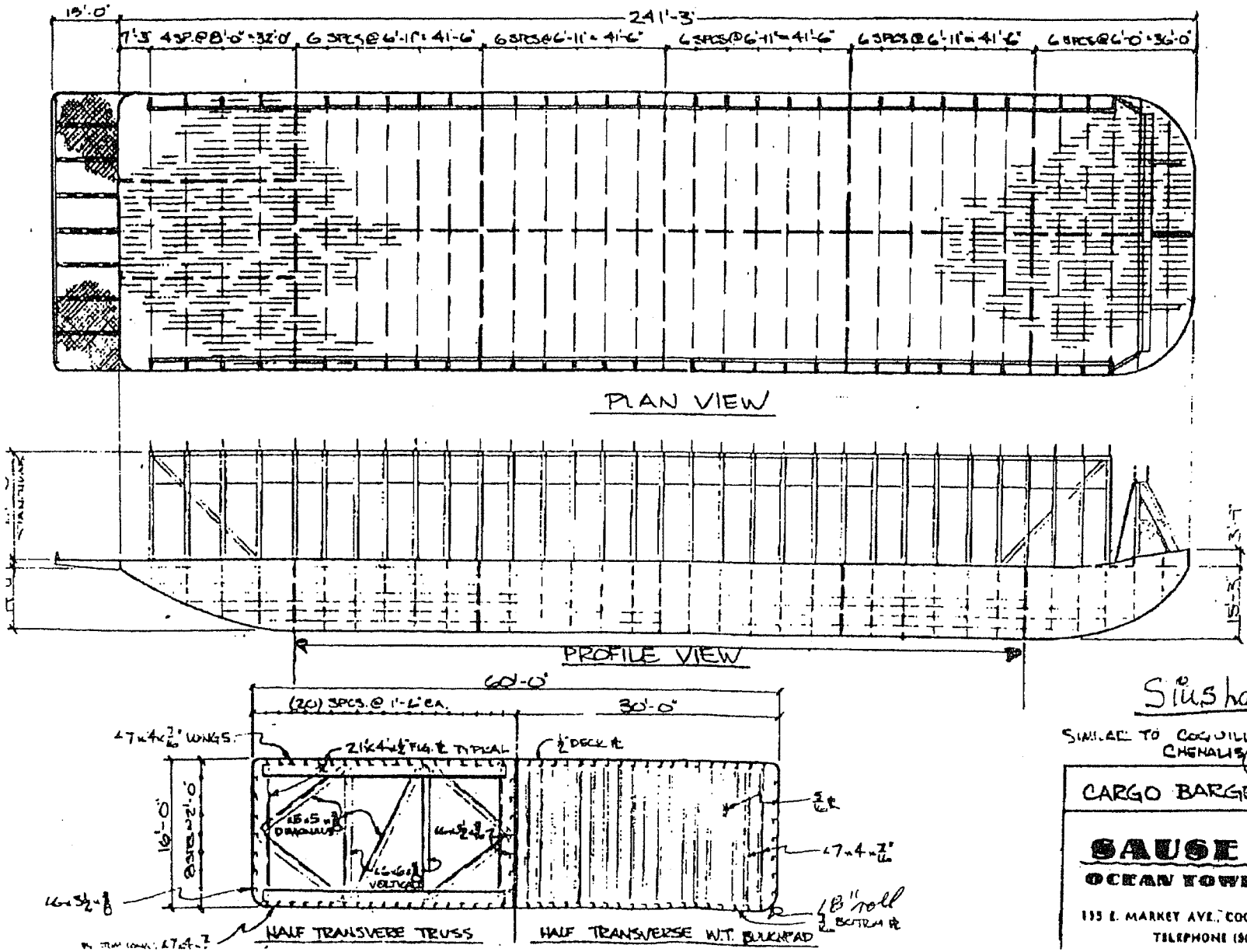

Siuslaw

SIMILAR TO COQUILLE, STUSLAW, CHEHALIS, NECANICUM

CARGO BARGE SKIPANON

SAUSE BRO

OCEAN TOWING CO.,

135 E. MARKET AVE., COOS BAY, OREGON

TELEPHONE (503) 269-3641

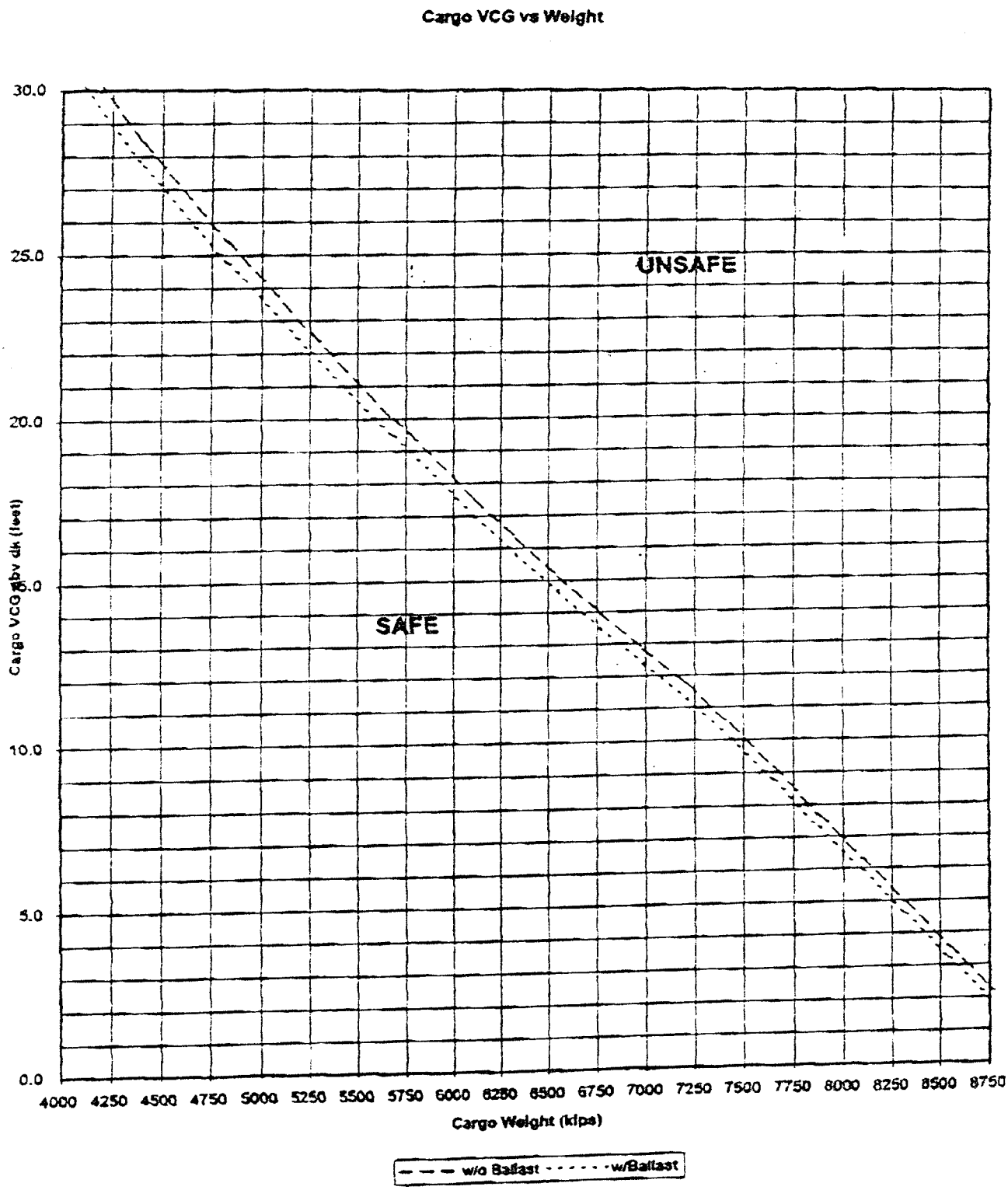
Cargo VCG vs Weight
30.0
25.0
20.0
15.0
10.0
5.0
0.0
Cargo VCG abv dk (feet)
UNSAFE
SAFE
4000 4250 4500 4750 5000 5250 5500 5750 6000 6250 6500 6750 7000 7250 7500 7750 8000 8250 8500 8750
Cargo Weight (kips)
w/o Ballast
w/Ballast

Barge *Siuslaw* Stability Check

Hull LOA = 240.25 ft
Beam = 60 ft
Molded Depth = 16 ft
Aft Hull Rake ~20 degrees (est.)
For Hull Rake ~ 17 degrees (est.)
Hull Lightship Displacement (D_B) = 891.5 tons (796 long tons) per USCG Memo
Summer Draft = 12.979 ft (12' 11-1/2") per USCG Memo
Light Draft = 29" – 30"
1. 28" x 28.74 + (2.33' x 2.33'/tan 20° x .5 + 2.33' x 2.33'/tan17° x .5) x 60' x .998 x 64/2000 = 836.18 tons
2. 30" x 28.74 + (2.5' x 2.5'/tan 20° x .5 + 2.5' x 2.5'/tan17° x .5) x 60' x .998 x 64/2000 = 898.2 tons
Transverse Block Coefficient = 0.998
Longitudinal Block Coefficient = n/a
Water Plane Area (light) = 60' x [180' + 6.87' + 8.17'] = 11,702 ft^2
Water Plane Moment of Inertia (light) = 195.04 x $60^3/12$ = 3,510,720 ft^4
Displacement Volume (light) = 891.5 tons x 2000 / 64 = 27,859 ft^3

tpi (immersion for 180' section of "flat" hull) = 180' x 60' x .998 x 1/12 x 64/2000 = 28.74 tons/inch

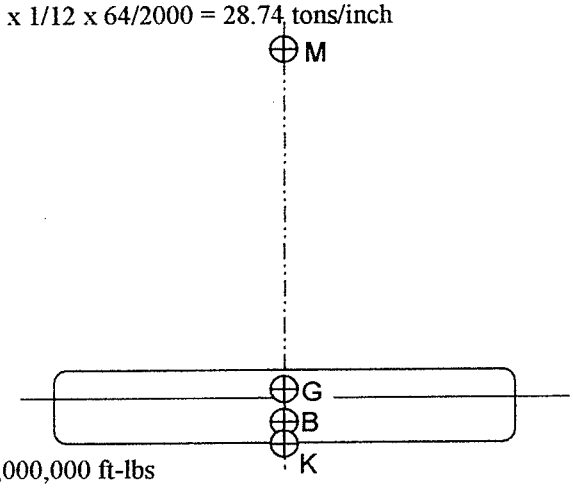

Transverse Metacenter (light)
K = 0 ft
B = 1.25 ft
M = I/V = 3,510,720 / 27,859 = 126 ft
G = 8 ft (est.)

KM >> KG Therefore OK

Weight of Crane (WC) = 450,000 lbs (225 tons)
Position of Crane wrt Long. CL = 4' Off
Weight of Lifted Package = 100,000 lbs (50 tons)
Operating Radius = 28 ft
Transverse Trimming Moment = 450,000 * 4' + 100,000 * (28'+4') = 5,000,000 ft-lbs
(this assumes that the crane offcenter moment is NOT trimmed with ballast)

Operating Dead Loads
Crane = 225 tons
Piles = 92 tons
Pile Hammer/Leads = 50 tons
Mooring Winches & Misc = 75 tons
Total Barge Hull & Dead Loads ~1335 tons
Operating Draft ~30" + Dead Load Draft = 44"
44" x 28.74 + (3.67' x 3.67'/tan 20° x .5 + 3.67' x 3.67'/tan17° x .5) x 60' x .998 x 64/2000 = 1341 tons OK
Water Plane Area (operating) = 60' x [180' + 10.08' + 12.00'] = 12,125 ft^2
Water Plane Moment of Inertia (operating) = 202 x $60^3/12$ = 3,636,000 ft^4
Displacement Volume (light) = 1335 tons x 2000 / 64 = 41,718 ft^3
M = I/V = 3,636,000 / 41,718 = 87.1 ft
G = 891.5 tons x 8' + 443 tons x 20' / 1335 tons = 12'
GM = 87.1' – 12' = 75.1 ft OK
D = displacement – 1335 tons x 2000 = 2,670,000 lbs
trim = wd x L / (D M) = 5,000,000 ft-lbs x 60' / (2,670,000 x 78.8') = 1.42 degrees OK

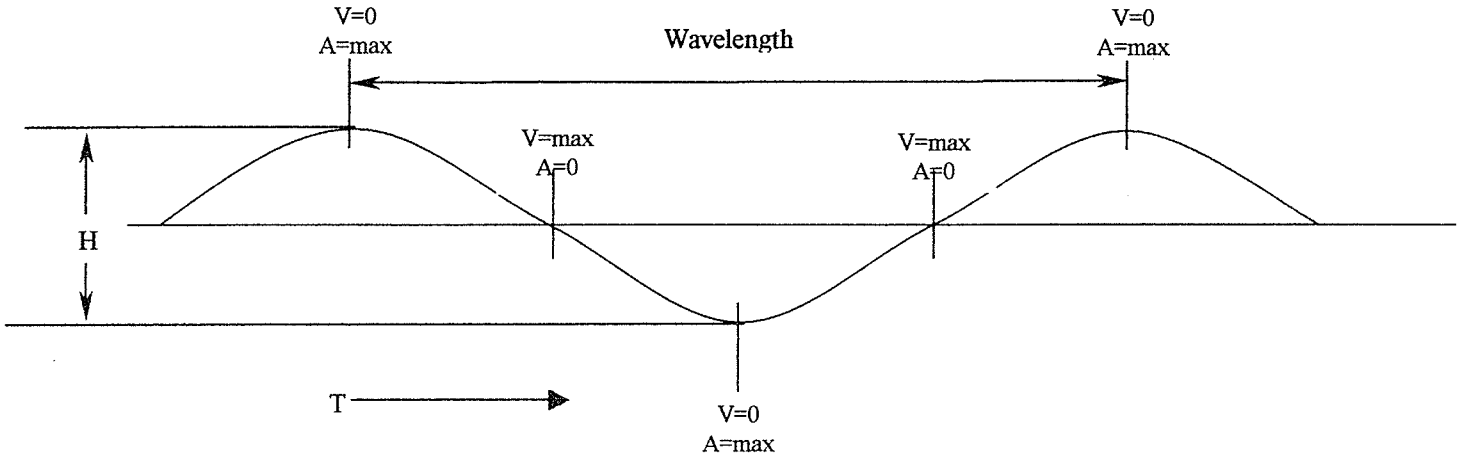

H = 5'
T = 9 seconds
t/4 – 2.25 seconds

assume the barge rides with the wave (very conservative for a moored barge), then;
if, $x = \frac{1}{2} at^2$, then heave acceleration = $2x/t^2 = 2 \times H/2 / 2.25^2 = 2 \times 2.5 / 2.25^2 = 0.98$ ft/sec^2 , or 0.03g

Wavelength $L \sim gT^2/2*pi * \tanh(2 * pi * D / L) \sim 265'$ where T = 9 sec & D = 32'

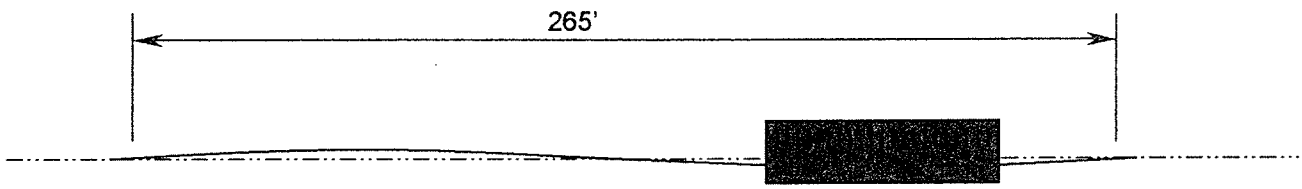

Relative Magnitude: Beam of Barge (60') vs. Wavelength (265') & Wave Height (5')
Scale 1" = 50'

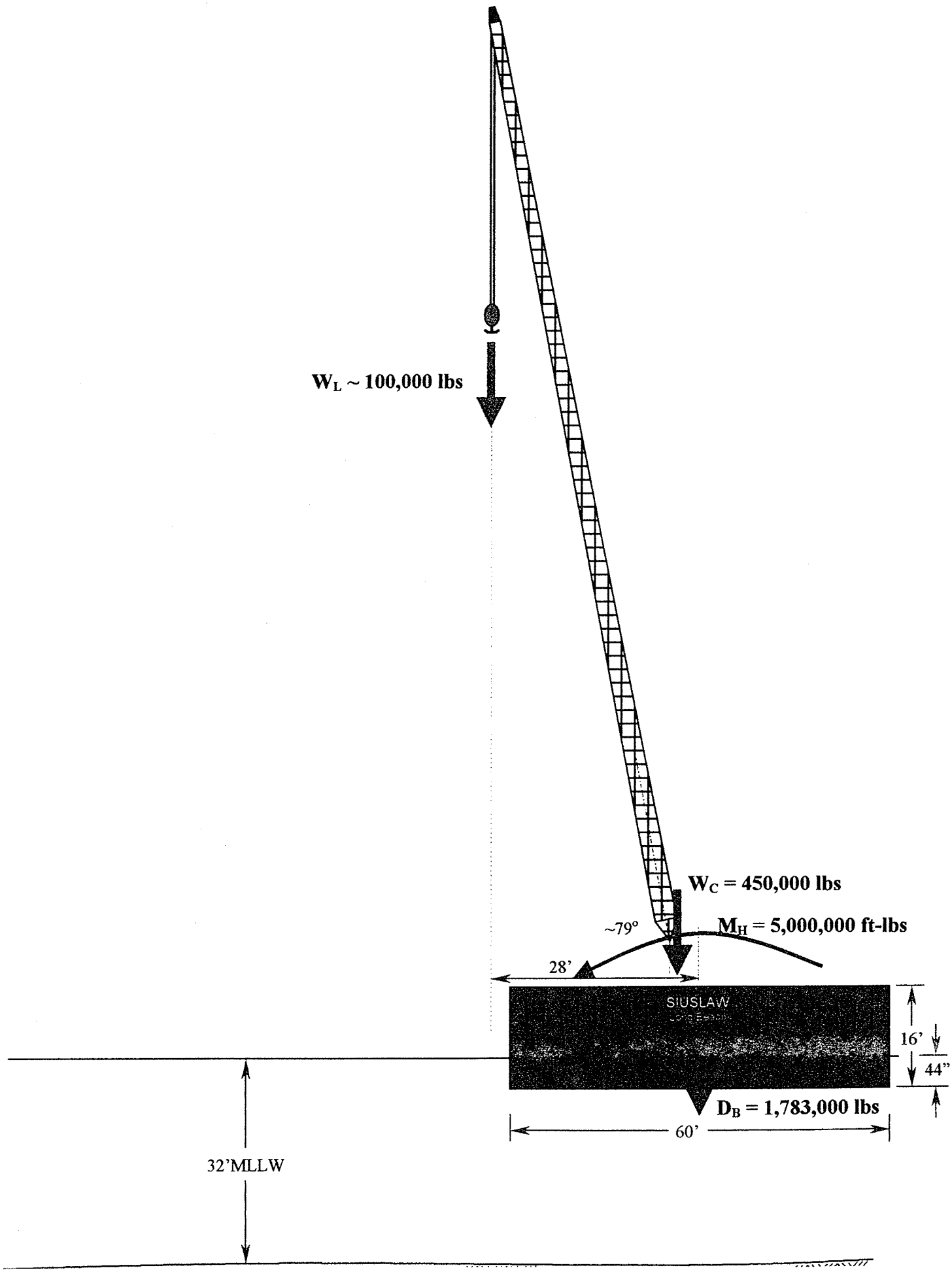
W_L ~ 100,000 lbs
W_C = 450,000 lbs
~79°
M_H = 5,000,000 ft-lbs
28'
SIUSLAW
16'
44"
D_B = 1,783,000 lbs
60'
32'MLLW

Crosby® Bolt-Type Shackles

BOLT TYPE ANCHOR SHACKLE

QUIC-CHECK™

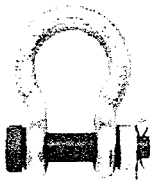

G-2130 S-2130

Bolt Type Anchor shackles with thin head bolt — nut with cotter pin. Meets the performance requirements of Federal Specification RR-C-271D Type IVA, Grade A, Class 3, except for those provisions required of the contractor

- Working Load Limit permanently shown on every shackle. Capacities ⅓ thru 150 tons.
- Forged — Quenched and Tempered, with alloy pins.
- Look for the Red Pin™ . . . the mark of genuine Crosby quality.
- Shackles 55 tons and smaller can be furnished proof tested with certificates to designated standards, such as ABS, DNV, Lloyds, or other certification.
- Certification must be requested at time of order.
- Shackles 85 tons and larger can be provided as follows.
  - Non Destructive Tested
  - Serialized Pin and Bow
  - Material Certification (Chemical)
  - Certification must be requested at time of order.
- Hot Dip galvanized or Self Colored.
- Fatigue rated.

BOLT TYPE CHAIN SHACKLE

G-2150 S-2150

Bolt Type Chain shackles. Thin hex head bolt — nut with cotter pin. Meets the performance requirements of Federal Specification RR-C-271D Type IVB, Grade A, Class 3, except for those provisions required of the contractors

Load Rated

Nominal Shackle Size (in.)	Working Load Limit * (tons)	Stock No. G-2130 Galv.	Stock No. S-2130 S.C.	Stock No. G-2150 Galv.	Stock No. S-2150 S.C.	2130 Weight Each (lbs.)	2150 Weight Each (lbs.)
3/16	⅓ ✡	1019464	—	—	—	.06	—
¼	½	1019466	—	1019768	—	.11	.13
5/16	¾	1019468	—	1019770	—	.22	.23
⅜	1	1019470	—	1019772	—	.33	.33
7/16	1½	1019471	—	1019774	—	.49	.49
½	2	1019472	1019481	1019775	1019784	.79	.75
⅝	3¼	1019490	1019506	1019793	1019800	1.68	1.47
¾	4¾	1019515	1019524	1019819	1019828	2.72	2.52
⅞	6½	1019533	1019542	1019837	1019846	3.95	3.85
1	8½	1019551	1019560	1019855	1019864	5.66	5.55
1⅛	9½	1019579	1019588	1019873	1019882	8.27	7.60
1¼	12	1019597	1019604	1019891	1019908	11.71	10.81
1⅜	13½	1019613	1019622	1019917	1019926	15.83	13.75
1½	17	1019631	1019640	1019935	1019944	20.80	18.50
1¾	25	1019659	1019668	1019953	1019962	33.91	31.40
2	35	1019677	1019686	1019971	1019980	52.25	46.75
2½	55	1019695	1019702	1019999	1020004	98.25	85.00
3	✡ 85	1019711	—	1020013	—	154.00	124.25
3½	✡120 ✡	1019739	—	—	—	265.00	—
4	✡150 ✡	1019757	—	—	—	338.00	—

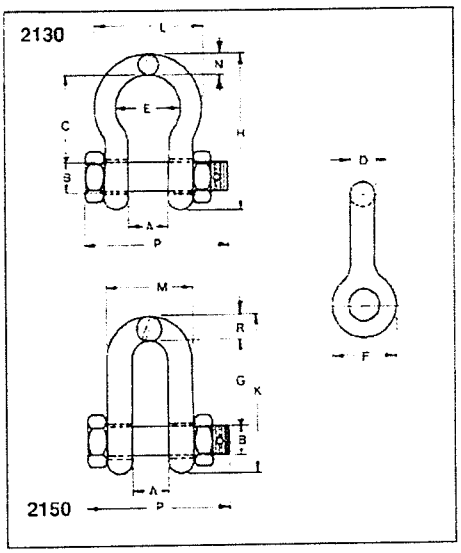

Nominal Shackle Size (in.)	Working Load Limit * (tons)	Dimensions (in.) A	B	C	D	E	F	G	H	K	L	M	N	P	R	Tolerance +/- C&G	A
3/16	⅓ ✡	.38	.25	.88	.19	.60	.56	—	1.47	—	.98	—	.19	1.29	—	.06	.06
¼	½	.47	.31	1.13	.25	.78	.61	.75	1.84	1.59	1.28	.97	.25	1.56	.25	.06	.06
5/16	¾	.53	.38	1.22	.31	.84	.75	1.00	2.09	1.91	1.47	1.16	.31	1.82	.31	.06	.06
⅜	1	.66	.44	1.44	.38	1.03	.91	1.22	2.49	2.30	1.78	1.41	.38	2.17	.38	.13	.06
7/16	1½	.75	.50	1.69	.44	1.16	1.06	1.42	2.91	2.66	2.03	1.62	.44	2.51	.44	.13	.06
½	2	.81	.63	1.88	.50	1.31	1.19	1.63	3.28	3.03	2.31	1.81	.50	2.80	.50	.13	.06
⅝	3¼	1.06	.75	2.38	.63	1.69	1.50	2.00	4.19	3.75	2.94	2.31	.69	3.53	.63	.13	.06
¾	4¾	1.25	.88	2.81	.75	2.00	1.81	2.38	4.97	4.53	3.50	2.75	.81	4.07	.81	.25	.06
⅞	6½	1.44	1.00	3.31	.88	2.28	2.09	2.81	5.83	5.33	4.03	3.19	.97	4.71	.97	.25	.06
1	8½	1.69	1.13	3.75	1.00	2.69	2.38	3.19	6.56	5.94	4.69	3.69	1.06	5.31	1.00	.25	.06
1⅛	9½	1.81	1.25	4.25	1.13	2.91	2.69	3.58	7.47	6.78	5.16	4.06	1.25	5.90	1.25	.25	.06
1¼	12	2.03	1.38	4.69	1.25	3.25	3.00	3.94	8.25	7.50	5.75	4.53	1.38	6.51	1.38	.25	.06
1⅜	13½	2.25	1.50	5.25	1.38	3.63	3.31	4.38	9.16	8.28	6.38	5.00	1.50	7.21	1.50	.25	.13
1½	17	2.38	1.63	5.75	1.50	3.88	3.63	4.81	10.00	9.06	6.88	5.38	1.62	7.73	1.62	.25	.13
1¾	25	2.88	2.00	7.00	1.75	5.00	4.19	5.75	12.34	10.97	8.86	6.38	2.25	9.05	2.12	.25	.13
2	35	3.25	2.25	7.75	2.00	5.75	4.81	6.75	13.68	12.28	9.97	7.25	2.40	10.41	2.00	.25	.13
2½	55	4.13	2.75	10.50	2.62	7.25	5.69	8.00	17.84	14.84	12.87	9.38	3.13	13.56	2.62	.25	.25
3	✡ 85	5.00	3.25	13.00	3.00	7.88	6.50	8.50	21.50	16.88	14.36	11.00	3.62	16.50	3.50	.25	.25
3½	✡120 ✡	5.25	3.75	14.63	3.62	9.00	8.00	—	24.63	—	16.50	—	4.12	19.00	—	.25	.25
4	✡150 ✡	5.50	4.25	14.50	4.10	10.00	9.00	—	25.69	—	18.42	—	4.56	19.75	—	.25	.25

* NOTE: Maximum Proof Load is 2.2 times the Working Load Limit. Minimum Ultimate Load is 6 times the Working Load Limit. For Working Load Limit reduction due to side loading applications, see page 64. ✡ Individually Proof Tested with certification and furnished with Hex