This information provided courtesy of Essex Crane Rental Corp. Toll-free Sales Line: 888-991-4100
Phone: 847-215-6500 Email: sales@essexcrane.com Web: www.essexcrane.com

MANITOWOC ENGINEERING CO.
A Division of The Manitowoc Company, Inc. Manitowoc, Wisconsin 54220

CAUTION

4100W SERIES 2

BOTH CARBODY COUNTERWEIGHTS MUST ALWAYS BE ATTACHED TO CARBODY BEFORE ATTACHING THE UPPER SIDE COUNTERWEIGHTS TO THE UPPER COUNTERWEIGHTS. LIKEWISE, THE UPPER SIDE COUNTERWEIGHTS MUST BE REMOVED FROM THE UPPER COUNTERWEIGHTS BEFORE REMOVING THE CARBODY COUNTERWEIGHTS. NEVER OPERATE THE MACHINE WITH UPPER SIDE COUNTERWEIGHTS IN PLACE UNLESS BOTH CARBODY COUNTERWEIGHTS ARE ALSO IN PLACE.

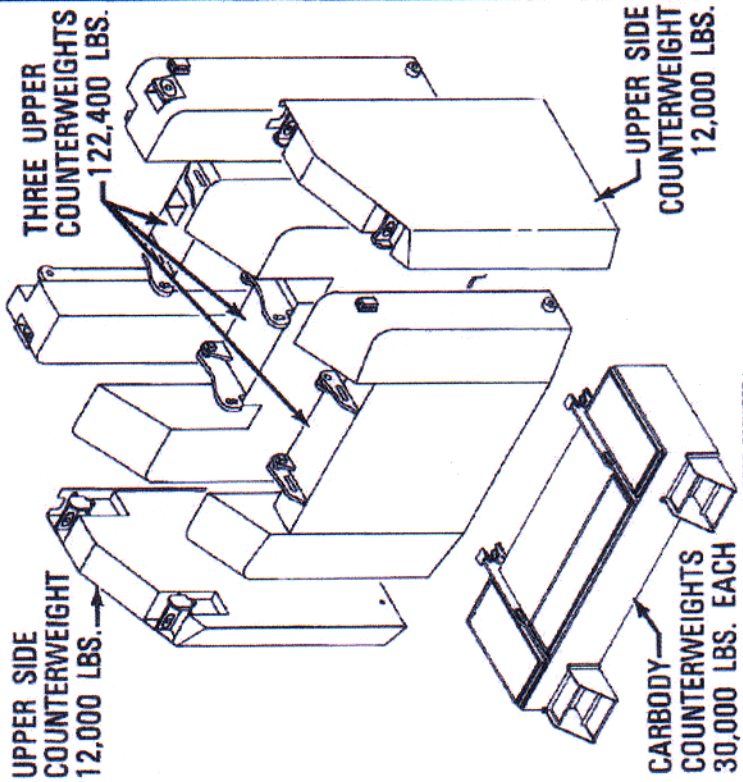

Fig. No. 1285

MANITOWOC ENGINEERING CO., MANITOWOC, WI 54220

Drwg. No. 183849
7-10-78

©MANITOWOC 1984

This information is for reference use only and must not be used for a specific serial numbered crane.
Please contact Essex Crane Rental Corp. at 847-215-6500 for further information.

D14