EXHIBIT G

California State Lands Commission Presurvey Notice Requirements for Permittees to Conduct Geophysical Survey Activities

All parts of the Presurvey Notice must be adequately filled out and submitted to the CSLC staff a minimum of twenty-one (21) calendar days prior to the proposed survey date to ensure adequate review and approval time for CSLC staff. Note that one or more of the items may require the Permittee to plan well in advance in order to obtain the necessary documentation prior to the Notice due date (e.g., permits from other State or Federal entities). Please use the boxes below to verify that all the required documents are included in the Presurvey Notice. If "No" is checked for any item, please provide an explanation in the space provided. If additional space is needed, please attach separate pages.

Please use the boxes below to verify that all the required documents are included in the Presurvey Notice. If "No" is checked for any item, please provide an explanation in the space provided. If additional space is needed, please attach separate pages.

Yes	No	
X	☐	Geophysical Survey Permit Exhibit F
X	☐	Survey Location (including a full-sized navigation chart and GPS coordinates for each proposed track line and turning point) Explanation: _____
☐	X	Permit(s) or Authorization from other Federal or State agencies (if applicable) Explanation:
X	☐	21-Day Written Notice of Survey Operations to Statewide Geophysical Coordinator/
X	☐	U.S. Coast Guard Local Notice to Mariners/
X	☐	Harbormaster and Dive Shop Notifications Explanation: _____
X	☐	Marine Wildlife Contingency Plan Explanation: _____
X	☐	Oil Spill Contingency Plan Explanation: _____
X	☐	Verification of California Air Resources Board's Tier 2-Certified Engine Requirement Explanation: _____
X	☐	Verification of Equipment Service and/or Maintenance (must verify sound output) Explanation: _____
☐	X	Permit(s) or Authorization from California Department of Fish and Wildlife for surveys in or affecting Marine Protected Area(s) (if applicable). Explanation: *Application for amendment to CDFW Permit #13052 in process*

._____

NOTE: CSLC staff will also require verification that current biological information was obtained and transmitted as outlined in Section 5 of this permit

EXHIBIT F

PRESURVEY NOTIFICATION FORM

Applicant/Permittee's Mailing Address: Date: 9/22/16

Jenny White Jurisdiction: Federal ____ State _X_ Both ___

USGS Pacific Coastal and Marine Geology If State: Permit #PRC 8394

2885 Mission Street Region: II

Santa Cruz, CA 95060 Area: Santa Barbara Basin

GEOPHYSICAL SURVEY PERMIT

Check one: ____New survey X Time extension of a previous survey

U.S.G.S. Pacific Coastal and Marine Geology (Applicant/Permittee) will conduct a geophysical survey offshore California in the survey area outlined on the accompanying navigation chart segment. If you foresee potential interference with commercial fishing or other activities, please contact the person(s) listed below:

FEDERAL WATERS (outside 3 nautical miles)

1) Applicant's representative: Jenny White
2) Federal representative: U.S. Geological Survey

NOTE: Any comments regarding potential conflicts in Federal waters must be received by the Applicant's Representative and lead Federal agency within ten (10) days of the receipt of this notice.

STATE WATERS (Inside 3 nautical miles)

1) Permittee's representative:
2) CSLC representative: Richard Greenwood

NOTE: Any comments regarding potential conflicts in State waters should be received as soon as possible by the Permittee's representative, no more than fifteen (15) days after the receipt of this notice.

1. Expected Dates of Operation: September 11 – October 4, 2016

2. Hours of Operation: 6AM to 7PM

3. Vessel Name: R/V Parke Snavely and R/V Shearwater

4. Vessel Official Number:

   R/V Snavely: USGS-2001279
   R/V Shearwater: MMSI # 366875820

5. Vessel Radio Call Sign:

   R/V Snavely: WZ3374
   R/V Shearwater: WDB2424

6. Vessel Captain's Name:

   R/V Snavely: Jenny White
   R/V Shearwater: Terrance Shinn

7. Vessel will monitor Radio Channel(s):

   R/V Snavely: 13,16
   R/V Shearwater: 13,16

8. Vessel Navigation System:

   R/V Snavely: Differential GPS
   R/V Shearwater: Differential GPS

9. Equipment to be used:

1. Reson 7111 SeaBat Multibeam
   a. Frequency (Hz, kHz): 100 kHz
   b. Source level: (dB re 1 μPa at 1 meter (m) (rms): 213 dB RMS
   c. Number of beams, across track beam width, and along track beam width:

      201 beams, 0.05° along track; 4.5° across track

   d. Pulse rate and length: 50-250 milliseconds depending on depth; 0.08-3.04ms pulse length
   e. Rise time: 7 μ seconds
   f. Estimated distances to the 190 dB, 180 dB, and 160 dB re 1 uPa (rms) isopleths,

      190 dB: 15M ; 180 dB: 42M ; 160 dB: 200M

      These estimates are based on the underwater sound propagation equation:

      RSPL= SL-20log (R/Ro)-AR, where

      RSPL = received sound potential level

      SL = RMS source level re. 1 uPa (rms) based on manufacturer's specifications

      R = Distance

      Ro = Reference Distance (1 m)

      A = sound absorption coefficient

   g. Deployment depth: 2.5 m
   h. Tow speed: 4-8 knots
   i. Approximate length of cable tow: 0 m; vessel pole mounted over the side

2. Applied Acoustics CSP 700 Sparker
   a. Frequency (Hz, kHz): 825 Hz
   b. Source level: (dB re 1 μPa at 1 meter (m) (rms): 202 dB RMS
   c. Number of beams, across track beam width, and along track beam width:

      1 beam, omnidirectional

   d. Pulse rate and length: 250-1500 milliseconds depending on depth; 800 μ seconds pulse length.
   e. Rise time: 7 μ seconds
   f. Estimated distances to the 190 dB, 180 dB, and 160 dB re 1 uPa (rms) isopleths,

      190 dB: 3m ; 180 dB: 12m ; 160 dB: 130m

      These estimates are based on the underwater sound propagation equation:

RSPL = received sound potential level

SL = RMS source level re. 1 uPa (rms) based on manufacturer's specifications

R = Distance

Ro = Reference Distance (1 m)

A = sound absorption coefficient (0.06dB/km)

g. Deployment depth: 1 m

h. Tow speed: 4-5 knots

i. Approximate length of cable tow: 30 m.

3. Applied Acoustics CSP 1200 Sparker

a. Frequency (Hz, kHz): 825 Hz

b. Source level: (dB re 1 µPa at 1 meter (m) (rms): 205 dB RMS

c. Number of beams, across track beam width, and along track beam width:

1 beam, omnidirectional

d. Pulse rate and length: 250-1500 milliseconds depending on depth; 1180 µ seconds pulse length.

e. Rise time: 7 µ seconds

f. Estimated distances to the 190 dB, 180 dB, and 160 dB re 1 uPa (rms) isopleths,

190 dB: 6m ; 180 dB: 16m ; 160 dB: 166m

These estimates are based on the underwater sound propagation equation:

RSPL= SL-20log (R/Ro)-AR, where

RSPL=recieved sound potential level

SL= RMS source level re. 1 uPa (rms) based on manufacturer's specifications

R= Distance

Ro= Reference Distance (1 m)

A= sound absorption coefficient (0.06dB/km)

g. Deployment depth: 1 m

h. Tow speed: 4-5 knots

i. Approximate length of cable tow: 30 m.

Applicant's Representative:
Jenny White
US Geological Survey
400 Natural Bridges Drive
Santa Cruz, CA 95060
831-460-7485

California State Lands Representative:
Richard B. Greenwood
Statewide Geophysical Coordinator
200 Oceangate, 12th Floor
Long Beach, CA 90802-4331
(562) 590-5201

BOEM Representative:
Joan Barminski
Chief, Office of Reservoir & Production
770 Paseo Camarillo
Camarillo, CA 93010
(805) 389-7707

The survey area is bounded by the coordinates:

N 34 26’21.63 W -120 27’59.80
N 34 24’35.47 W -119 40’24.56
N 33 53’13.75 W -119 40’28.60
N 33 54’27.82 W -120 29’34.29

The track line coordinates for the San Miguel Island survey are:

Lon2	Lat2	Lon1	Lat1
-120.2763875	33.99168913	-120.3061301	33.99234443
-120.2763156	33.9939413	-120.3060589	33.99459667
-120.2762437	33.99619348	-120.3059878	33.9968489
-120.2761718	33.99844566	-120.3059167	33.99910113
-120.2760998	34.00069783	-120.3058455	34.00135336
-120.2760279	34.00295	-120.3057743	34.00360559
-120.2759559	34.00520218	-120.3057032	34.00585782
-120.2758839	34.00745435	-120.305632	34.00811004
-120.275812	34.00970652	-120.3055608	34.01036227
-120.27574	34.01195869	-120.3054896	34.01261449
-120.275668	34.01421086	-120.3054184	34.01486672
-120.3054184	34.01486672	-120.3061301	33.99234443
-120.3027138	34.01480739	-120.3034262	33.99228516
-120.3000092	34.014748	-120.3007223	33.99222582
-120.2973046	34.01468856	-120.2980184	33.99216642
-120.2946	34.01462905	-120.2953145	33.99210697
-120.2918954	34.01456949	-120.2926106	33.99204746
-120.2891908	34.01450987	-120.2899068	33.99198788
-120.2864862	34.01445018	-120.2872029	33.99192825
-120.2837817	34.01439044	-120.284499	33.99186856
-120.2810771	34.01433064	-120.2817952	33.99180881
-120.2783726	34.01427078	-120.2790914	33.991749
-120.275668	34.01421086	-120.2763875	33.99168913

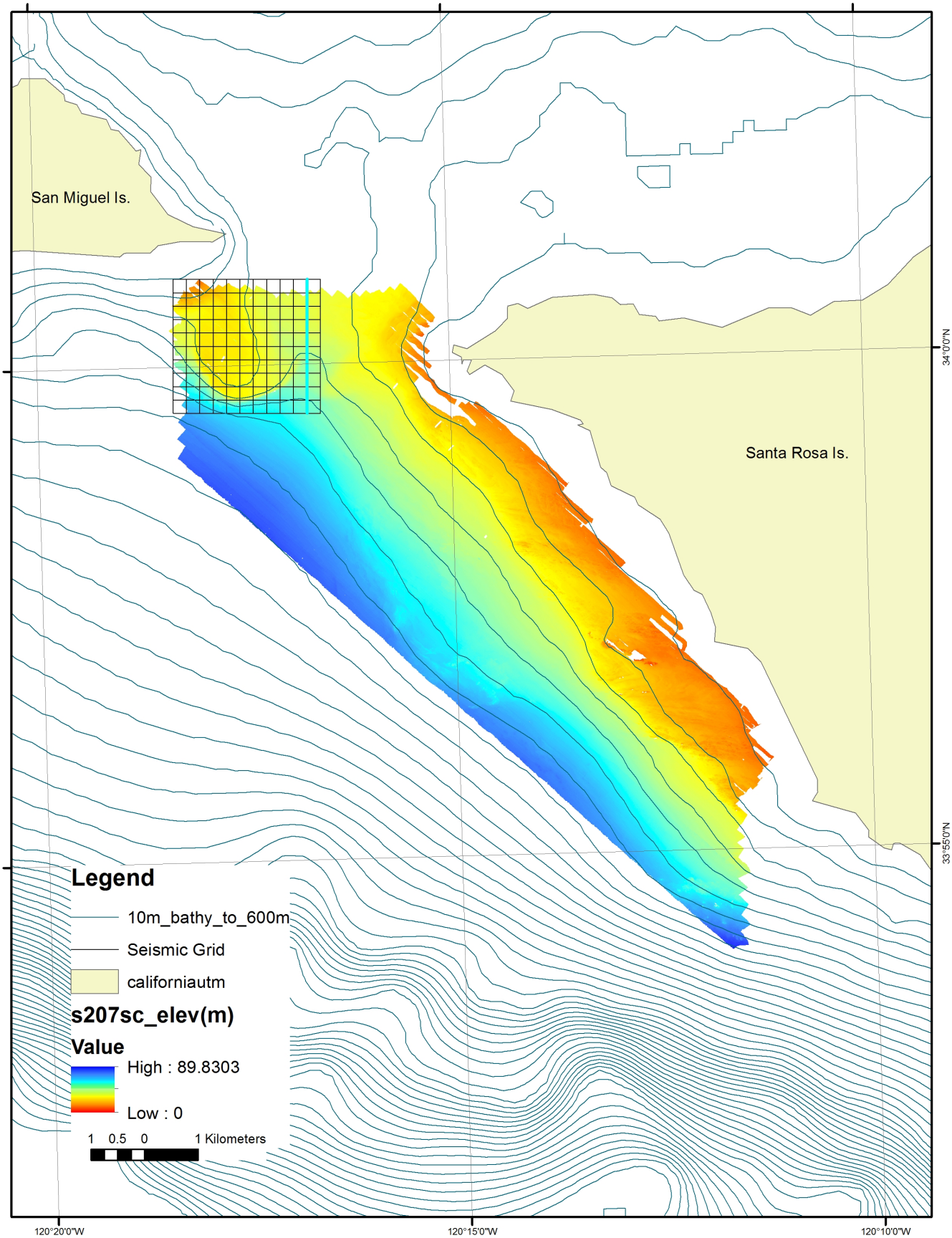
San Miguel Is.
Santa Rosa Is.
34°0'0"N
33°55'0"N
120°20'0"W
120°15'0"W
120°10'0"W
Legend
10m_bathy_to_600m
Seismic Grid
californiautm
s207sc_elev(m)
Value
High : 89.8303
Low : 0
1 0.5 0 1 Kilometers

The track line coordinates for the Goleta survey on the R/V Snavely are:

Start_longitude	Start_latatitude	End_longitude	End_latatitude
-120.0050203	34.38978686	-120.192657	34.4210474
-120.002509	34.39212399	-120.191846	34.42366979
-119.9999977	34.39446097	-120.1910349	34.42629218
-119.9974861	34.39679798	-120.1902238	34.42891455
-120.1964631	34.41763205	-120.0073851	34.38573445
-120.1980301	34.41237879	-120.0107115	34.38078059
-120.1995969	34.40712541	-120.0140374	34.37582651
-120.2011635	34.401872	-120.017363	34.37087233
-120.044806	34.33692706	-120.2177585	34.36575048
-120.0359606	34.34647623	-120.214914	34.37630615
-120.0271132	34.35602473	-120.2120686	34.38686171
-120.0182638	34.36557239	-120.2092225	34.39741724
-119.8304749	34.34962061	-120.0048067	34.39264993
-119.8296764	34.35224353	-120.0022822	34.39484836
-119.8288779	34.35486635	-119.9997576	34.39704682
-119.8280792	34.35748916	-119.997233	34.39924514
-119.8366138	34.33146569	-120.0168121	34.37582393
-119.8351592	34.33674633	-120.013977	34.38076609
-119.8337044	34.34202694	-120.0111415	34.38570817
-119.8322494	34.34730751	-120.0083056	34.39065016
-119.8733811	34.22200406	-120.0872688	34.27408291
-119.8686922	34.23494494	-120.0789171	34.28613821
-119.8640017	34.24788553	-120.0705628	34.2981929
-119.8593096	34.26082593	-120.0622061	34.31024686
-119.8546159	34.27376596	-120.053847	34.32230002
-119.8499207	34.28670579	-120.0454853	34.33435256
-119.8452238	34.29964525	-120.0371211	34.34640438
-119.8405254	34.31258452	-120.0287546	34.35845539
-119.8358254	34.32552341	-120.0203855	34.37050577
-120.1910473	34.42030747	-120.3037337	34.42233753
-120.1900383	34.42299273	-120.3032434	34.425033
-120.189029	34.42567797	-120.3027532	34.42772847
-120.1880198	34.42836329	-120.3022628	34.43042385
-120.1990726	34.39934975	-120.3051331	34.40125366
-120.1968184	34.40471627	-120.304855	34.40665688
-120.194564	34.41008265	-120.3045769	34.4120601
-120.1923092	34.41544897	-120.3042987	34.41746332
-120.2127492	34.36542179	-120.3068169	34.3671696
-120.2091813	34.37481815	-120.3063539	34.37662559
-120.2056125	34.38421435	-120.3058907	34.38608157
-120.2020428	34.39361049	-120.3054272	34.39553752
-120.3005037	34.41944978	-120.4228912	34.36582776
-120.3005107	34.42250347	-120.4243227	34.36825844
-120.3005178	34.42555716	-120.4257541	34.37068919
-120.3005249	34.42861085	-120.4271857	34.37311993

-120.3005389	34.43471822	-120.4300491	34.37798128
-120.300546	34.43777191	-120.4314809	34.38041197
-120.3040823	34.36763139	-120.3987691	34.32602399
-120.3035327	34.37551915	-120.4022744	34.33213248
-120.3029829	34.3834069	-120.4057803	34.33824088
-120.302433	34.39129462	-120.4092866	34.34434921
-120.3018829	34.39918233	-120.4127935	34.35045754
-120.3013327	34.40706994	-120.4163008	34.3565657
-120.3007823	34.41495761	-120.4198086	34.36267377

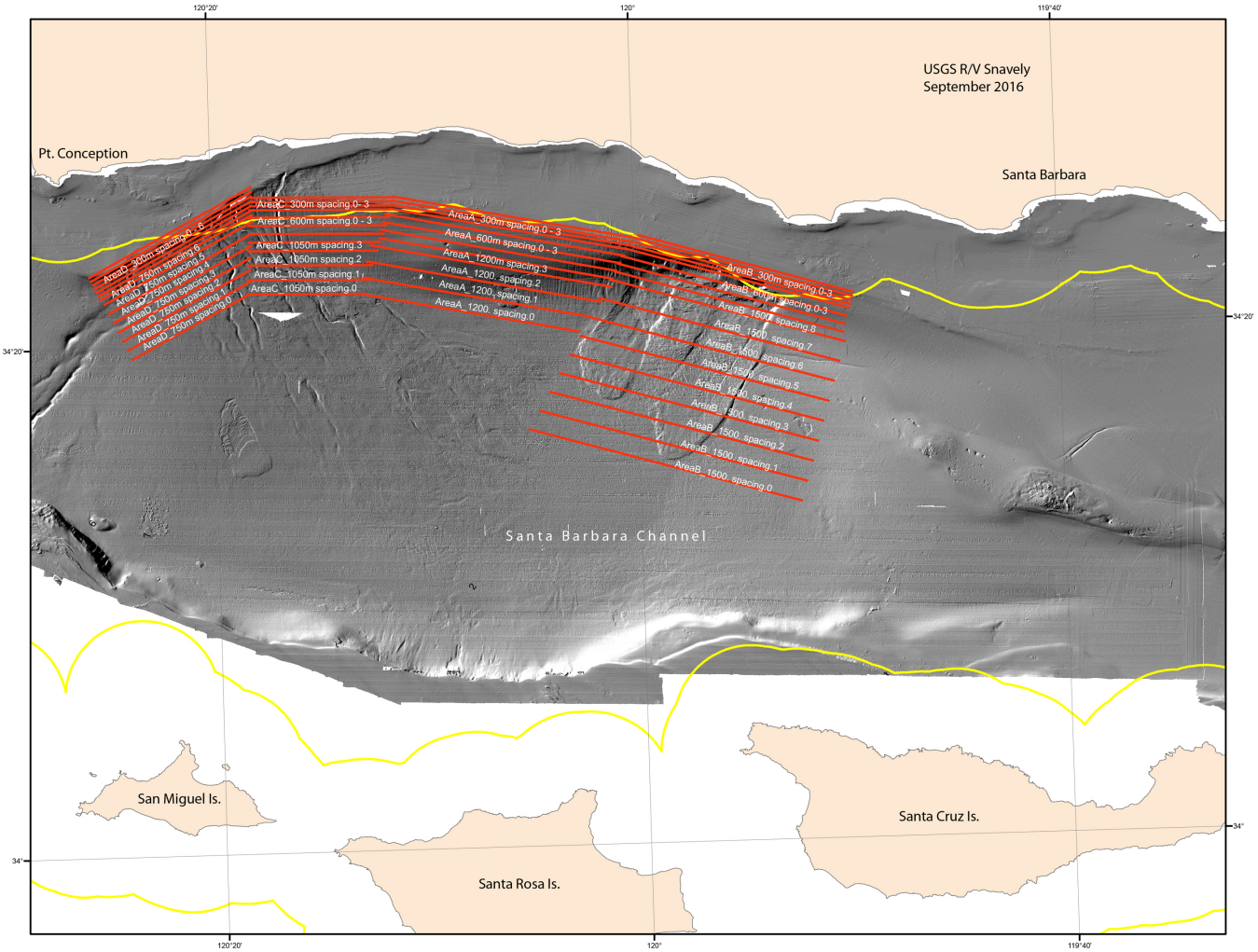

The track line coordinates for the Goleta survey on the R/V Shearwater are:

Start_longitude	Start_latatitude	End_longitude	End_latatitude
-119.9696018	34.41230513	-120.0158247	34.2324992
-119.9802752	34.41402405	-120.0263375	34.23475712
-119.9909492	34.41574207	-120.0368507	34.23701416
-120.0016236	34.41745917	-120.0473647	34.23927032
-120.0122986	34.41917536	-120.0578793	34.24152552
-120.0229741	34.42089073	-120.0683946	34.24377994
-120.03365	34.4226051	-120.0789105	34.24603348
-120.0443264	34.42431855	-120.0894268	34.24828606
-120.0550033	34.4260311	-120.099944	34.25053785
-120.0656809	34.42774273	-120.1104617	34.25278876
-120.0763588	34.42945345	-120.1209801	34.2550388
-120.0870373	34.43116335	-120.1314991	34.25728787
-120.0977163	34.43287225	-120.1420186	34.25953615
-120.1083957	34.43458023	-120.1525388	34.26178356
-120.1190757	34.4362873	-120.1630596	34.26403
-120.1297561	34.43799346	-120.1735811	34.26627565

-120.1511186	34.44140313	-120.1946259	34.27076433
-120.1618006	34.44310655	-120.2051492	34.27300726
-120.1724831	34.44480905	-120.2156731	34.2752494
-120.1831661	34.44651064	-120.2261977	34.27749066
-120.3034247	34.45234354	-120.2230336	34.32931635
-120.3132633	34.44846918	-120.2327993	34.325354
-120.3231009	34.44459407	-120.2425641	34.32139073
-120.3329377	34.44071803	-120.2523279	34.31742664
-120.3427736	34.43684115	-120.262091	34.31346172
-120.3526087	34.43296353	-120.2718531	34.30949606
-120.3624428	34.42908499	-120.2816144	34.30552949
-120.3722761	34.42520569	-120.2913748	34.3015621
-120.3821086	34.42132547	-120.3011342	34.29759387
-120.3919401	34.41744442	-120.3108929	34.29362492
-120.4017709	34.41356262	-120.3206507	34.28965505
-120.4116007	34.40967989	-120.3304075	34.28568436
-120.4214296	34.40579642	-120.3401635	34.28171284
-120.4312577	34.40191203	-120.3499186	34.27774059
-120.4340689	34.38733388	-120.3596728	34.27376743
-120.1979478	34.46364527	-120.2011147	34.36871834
-120.208855	34.46293181	-120.2133276	34.32820705
-120.2197621	34.46221746	-120.2241845	34.32848031
-120.2306691	34.46150203	-120.2350415	34.32875252
-120.2415759	34.46078562	-120.2458987	34.32902377
-120.2524827	34.46006823	-120.2567561	34.32929415
-120.2633893	34.45934985	-120.2676135	34.32956348
-120.2742958	34.45863049	-120.2784711	34.32983184
-120.2852021	34.45791015	-120.2893289	34.33009925
-120.378	34.436	-120.233	34.044
-120.229	34.044	-119.95	34.398
-120.307	34.454	-120.271	34.42
-120.258	34.423	-120.299	34.459
-120.292	34.464	-120.243	34.424
-120.41	34.238	-120.448	34.195
-120.387	34.166	-120.382	34.256
-119.93	34.267	-119.804	34.356
-119.77	34.345	-119.903	34.247

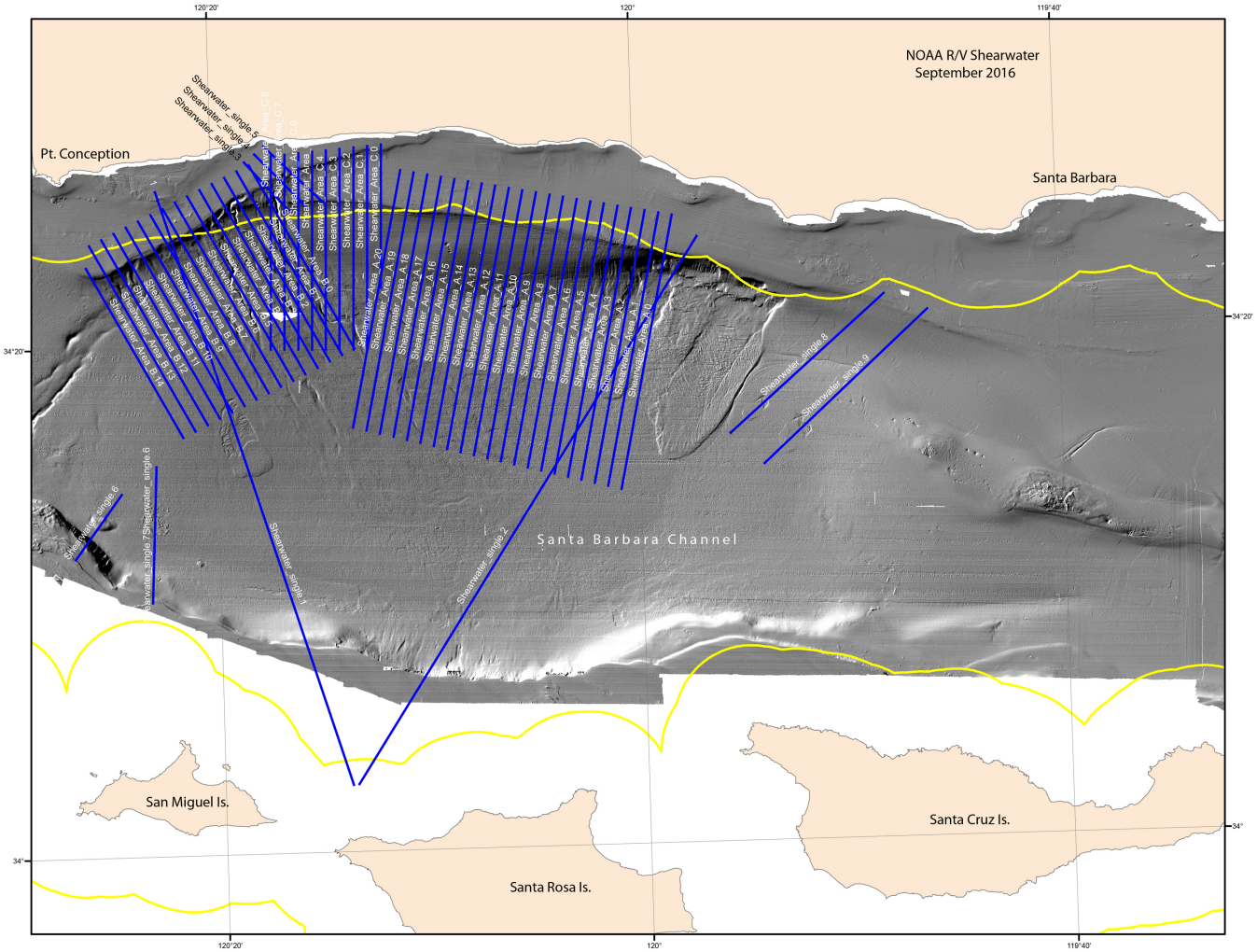
NOAA R/V Shearwater
September 2016
Pt. Conception
Santa Barbara
Santa Barbara Channel
San Miguel Is.
Santa Rosa Is.
Santa Cruz Is.
120°20'
120°
119°40'
34°20'
34°

Reply Reply All Forward

Notice of Extension of Geophysical Survey Operations - Santa Barbara Basin -Geophysical Coordinator and Notice to Mariners

White, Jennifer [jennifer_white@usgs.gov]

To: SLCOGPP@SLC; D11LNM@uscg.mil

Cc: Keen, Kelly@SLC; Greenwood, Richard@SLC

Attachments: CSLC EXHIBIT F EXTENSION ~1.docx (10 MB) [Open as Web Page]

Friday, September 23, 2016 10:38 AM

Retention Policy: Enforced: Inbox 90 Day PermDelete (90 Days) Expires: 12/22/2016

PRE SURVEY NOTIFICATION FOR GEOPHYSICAL SURVEY

The USGS Pacific Coastal and Marine Science Center (PCMSC) is currently conducting a geophysical survey under California State Lands Permit #8394. The two primary survey areas are southeast of San Miguel Island and along the mainland coast from Santa Barbara to Point Conception. Operations will include two vessels. The USGS research vessel Parke Snavely is a 36-foot aluminum catamaran and the NOAA research vessel Shearwater is a 62-foot aluminum catamaran. The Snavely will use a pole mounted Reson 7111 multibeam echo sounder and mini-sparker while the Shearwater operations will include a mini-sparker and towed camera system. The survey dates will be extended to October 4, 2016.

In keeping with our California State Lands Permit requirements, we are providing you with the attached Geophysical Pre-Survey Notice for your information.

--
Jenny White
Marine Operations Manager
Pacific Coastal and Marine Science Center
U.S. Geological Survey
(831) 818-8915 cell
(831) 460-7485 work

Reply Reply All Forward

Notice of Extension of Geophysical Survey Operations - Santa Barbara Basin - Harbormasters

White, Jennifer [jennifer_white@usgs.gov]

To: CIHarborVisitors@ventura.org; jhiggins@venturaharbor.com; mkronman@santabarbaraca.gov; ktreiberg@santabarbaraca.gov; smarble@ocsd.org; harbormaster@portofhueneme.org

Cc: Keen, Kelly@SLC; Greenwood, Richard@SLC

Attachments: CSLC EXHIBIT F EXTENSION ~1.docx (10 MB) [Open as Web Page]

Friday, September 23, 2016 10:38 AM

Retention Policy: Enforced: Inbox 90 Day PermDelete (90 Days) Expires: 12/22/2016

PRE SURVEY NOTIFICATION FOR GEOPHYSICAL SURVEY

The USGS Pacific Coastal and Marine Science Center (PCMSC) is currently conducting a geophysical survey under California State Lands Permit #8394. The two primary survey areas are southeast of San Miguel Island and along the mainland coast from Santa Barbara to Point Conception. Operations will include two vessels. The USGS research vessel Parke Snavely is a 36-foot aluminum catamaran and the NOAA research vessel Shearwater is a 62-foot aluminum catamaran. The Snavely will use a pole mounted Reson 7111 multibeam echo sounder and mini-sparker while the Shearwater operations will include a mini-sparker and towed camera system. The survey dates will be extended to October 4, 2016.

In keeping with our California State Lands Permit requirements, we are providing you with the attached Geophysical Pre-Survey Notice for your information.

--
Jenny White
Marine Operations Manager
Pacific Coastal and Marine Science Center
U.S. Geological Survey
(831) 818-8915 cell
(831) 460-7485 work

Reply Reply All Forward

Notice of Extension of Geophysical Survey Operations - Santa Barbara Basin - Dive Shops

White, Jennifer [jennifer_white@usgs.gov]

To: cmcdiver@aol.com; mail@centralcoastkayaks.com; info@santabarbarascuba.com; jeff@pacificwilderness.com; dive@scubadivela.com

Cc: Keen, Kelly@SLC; Greenwood, Richard@SLC

Attachments: CSLC EXHIBIT F EXTENSION ~1.docx (10 MB) [Open as Web Page]

Friday, September 23, 2016 10:38 AM

Retention Policy: Enforced: Inbox 90 Day PermDelete (90 Days) Expires: 12/22/2016

PRE SURVEY NOTIFICATION FOR GEOPHYSICAL SURVEY

The USGS Pacific Coastal and Marine Science Center (PCMSC) is currently conducting a geophysical survey under California State Lands Permit #8394. The two primary survey areas are southeast of San Miguel Island and along the mainland coast from Santa Barbara to Point Conception. Operations will include two vessels. The USGS research vessel Parke Snavely is a 36-foot aluminum catamaran and the NOAA research vessel Shearwater is a 62-foot aluminum catamaran. The Snavely will use a pole mounted Reson 7111 multibeam echo sounder and mini-sparker while the Shearwater operations will include a mini-sparker and towed camera system. The survey dates will be extended to October 4, 2016.

In keeping with our California State Lands Permit requirements, we are providing you with the attached Geophysical Pre-Survey Notice for your information.

--
Jenny White
Marine Operations Manager
Pacific Coastal and Marine Science Center
U.S. Geological Survey
(831) 818-8915 cell
(831) 460-7485 work

EXHIBIT F

PRESURVEY NOTIFICATION FORM

Applicant/Permittee's Mailing Address: Date: 8/16/16

Jenny White Jurisdiction: Federal ____ State _X_ Both ___

USGS Pacific Coastal and Marine Geology If State: Permit #PRC 8394

2885 Mission Street Region: II

Santa Cruz, CA 95060 Area: Santa Barbara Basin

GEOPHYSICAL SURVEY PERMIT

Check one: __X__ New survey ____ Time extension of a previous survey

U.S.G.S. Pacific Coastal and Marine Geology (Applicant/Permittee) will conduct a geophysical survey offshore California in the survey area outlined on the accompanying navigation chart segment. If you foresee potential interference with commercial fishing or other activities, please contact the person(s) listed below:

FEDERAL WATERS (outside 3 nautical miles)

1) Applicant's representative: Jenny White
2) Federal representative: U.S. Geological Survey

NOTE: Any comments regarding potential conflicts in Federal waters must be received by the Applicant's Representative and lead Federal agency within ten (10) days of the receipt of this notice.

STATE WATERS (Inside 3 nautical miles)

1) Permittee's representative:
2) CSLC representative: Richard Greenwood

NOTE: Any comments regarding potential conflicts in State waters should be received as soon as possible by the Permittee's representative, no more than fifteen (15) days after the receipt of this notice.

1. Expected Dates of Operation: September 11 – October 1, 2016

2. Hours of Operation: 6AM to 7PM

3. Vessel Name: R/V Parke Snavely and R/V Shearwater

4. Vessel Official Number:

   R/V Snavely: USGS-2001279
   R/V Shearwater: MMSI # 366875820

5. Vessel Radio Call Sign:

   R/V Snavely: WZ3374
   R/V Shearwater: WDB2424

6. Vessel Captain's Name:

   R/V Snavely: Peter Dal Ferro
   R/V Shearwater: Terrance Shinn

7. Vessel will monitor Radio Channel(s):

   R/V Snavely: 13,16
   R/V Shearwater: 13,16

8. Vessel Navigation System:

   R/V Snavely: Differential GPS
   R/V Shearwater: Differential GPS

9. Equipment to be used:

1. Reson 7111 SeaBat Multibeam
   a. Frequency (Hz, kHz): 100 kHz
   b. Source level: (dB re 1 µPa at 1 meter (m) (rms): 213 dB RMS
   c. Number of beams, across track beam width, and along track beam width:

      201 beams, 0.05° along track; 4.5° across track

   d. Pulse rate and length: 50-250 milliseconds depending on depth; 0.08-3.04ms pulse length
   e. Rise time: 7 µ seconds
   f. Estimated distances to the 190 dB, 180 dB, and 160 dB re 1 uPa (rms) isopleths,

      190 dB: 15M ; 180 dB: 42M ; 160 dB: 200M

      These estimates are based on the underwater sound propagation equation:

      RSPL= SL-20log (R/Ro)-AR, where

      RSPL = received sound potential level

      SL = RMS source level re. 1 uPa (rms) based on manufacturer's specifications

      R = Distance

      Ro = Reference Distance (1 m)

      A = sound absorption coefficient

   g. Deployment depth: 2.5 m
   h. Tow speed: 4-8 knots
   i. Approximate length of cable tow: 0 m; vessel pole mounted over the side

2. Applied Acoustics CSP 700 Sparker
   a. Frequency (Hz, kHz): 825 Hz
   b. Source level: (dB re 1 µPa at 1 meter (m) (rms): 202 dB RMS
   c. Number of beams, across track beam width, and along track beam width:

      1 beam, omnidirectional

   d. Pulse rate and length: 250-1500 milliseconds depending on depth; 800 µ seconds pulse length.
   e. Rise time: 7 µ seconds
   f. Estimated distances to the 190 dB, 180 dB, and 160 dB re 1 uPa (rms) isopleths,

      190 dB: 3m ; 180 dB: 12m ; 160 dB: 130m

      These estimates are based on the underwater sound propagation equation:

      RSPL= SL-20log (R/Ro)-AR, where

RSPL = received sound potential level

SL = RMS source level re. 1 uPa (rms) based on manufacturer's specifications

R = Distance

Ro = Reference Distance (1 m)

A = sound absorption coefficient (0.06dB/km)

g. Deployment depth: 1 m

h. Tow speed: 4-5 knots

i. Approximate length of cable tow: 30 m.

3. Applied Acoustics CSP 1200 Sparker

a. Frequency (Hz, kHz): 825 Hz

b. Source level: (dB re 1 µPa at 1 meter (m) (rms): 205 dB RMS

c. Number of beams, across track beam width, and along track beam width:

1 beam, omnidirectional

d. Pulse rate and length: 250-1500 milliseconds depending on depth; 1180 µ seconds pulse length.

e. Rise time: 7 µ seconds

f. Estimated distances to the 190 dB, 180 dB, and 160 dB re 1 uPa (rms) isopleths,

190 dB: 6m ; 180 dB: 16m ; 160 dB: 166m

These estimates are based on the underwater sound propagation equation:

RSPL= SL-20log (R/Ro)-AR, where

RSPL=recieved sound potential level

SL= RMS source level re. 1 uPa (rms) based on manufacturer's specifications

R= Distance

Ro= Reference Distance (1 m)

A= sound absorption coefficient (0.06dB/km)

g. Deployment depth: 1 m

h. Tow speed: 4-5 knots

i. Approximate length of cable tow: 30 m.

Applicant's Representative:
Jenny White
US Geological Survey
400 Natural Bridges Drive
Santa Cruz, CA 95060
831-460-7485

California State Lands Representative:
Richard B. Greenwood
Statewide Geophysical Coordinator
200 Oceangate, 12th Floor
Long Beach, CA 90802-4331
(562) 590-5201

BOEM Representative:
Joan Barminski
Chief, Office of Reservoir & Production
770 Paseo Camarillo
Camarillo, CA 93010
(805) 389-7707

The survey area is bounded by the coordinates:

N 34 26’21.63 W -120 27’59.80
N 34 24’35.47 W -119 40’24.56
N 33 53’13.75 W -119 40’28.60
N 33 54’27.82 W -120 29’34.29

The track line coordinates for the San Miguel Island survey are:

Lon2	Lat2	Lon1	Lat1
-120.2763875	33.99168913	-120.3061301	33.99234443
-120.2763156	33.9939413	-120.3060589	33.99459667
-120.2762437	33.99619348	-120.3059878	33.9968489
-120.2761718	33.99844566	-120.3059167	33.99910113
-120.2760998	34.00069783	-120.3058455	34.00135336
-120.2760279	34.00295	-120.3057743	34.00360559
-120.2759559	34.00520218	-120.3057032	34.00585782
-120.2758839	34.00745435	-120.305632	34.00811004
-120.275812	34.00970652	-120.3055608	34.01036227
-120.27574	34.01195869	-120.3054896	34.01261449
-120.275668	34.01421086	-120.3054184	34.01486672
-120.3054184	34.01486672	-120.3061301	33.99234443
-120.3027138	34.01480739	-120.3034262	33.99228516
-120.3000092	34.014748	-120.3007223	33.99222582
-120.2973046	34.01468856	-120.2980184	33.99216642
-120.2946	34.01462905	-120.2953145	33.99210697
-120.2918954	34.01456949	-120.2926106	33.99204746
-120.2891908	34.01450987	-120.2899068	33.99198788
-120.2864862	34.01445018	-120.2872029	33.99192825
-120.2837817	34.01439044	-120.284499	33.99186856
-120.2810771	34.01433064	-120.2817952	33.99180881
-120.2783726	34.01427078	-120.2790914	33.991749
-120.275668	34.01421086	-120.2763875	33.99168913

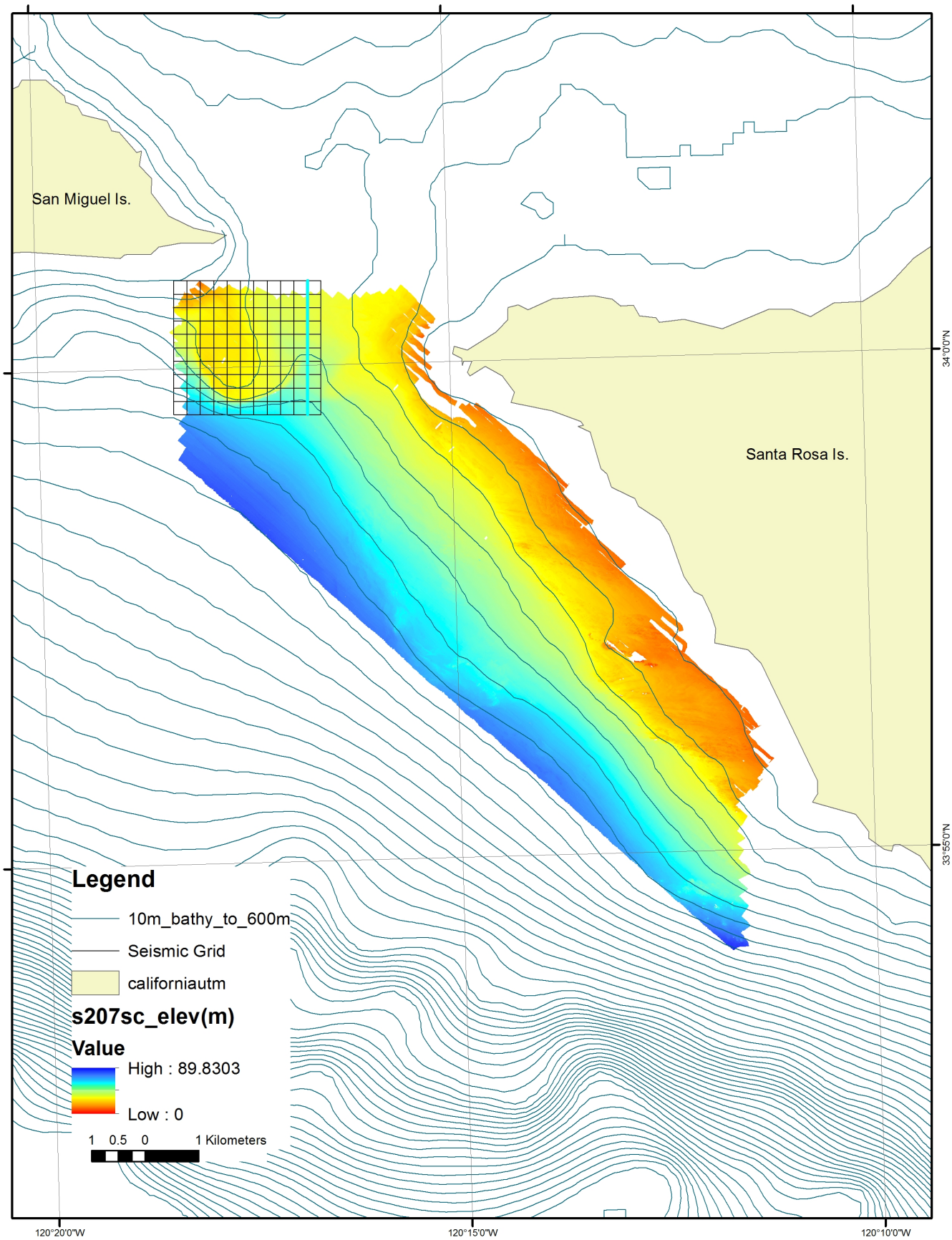
San Miguel Is.
Santa Rosa Is.
34°0'0"N
33°55'0"N
120°20'0"W
120°15'0"W
120°10'0"W
Legend
10m_bathy_to_600m
Seismic Grid
californiautm
s207sc_elev(m)
Value
High : 89.8303
Low : 0
1 0.5 0 1 Kilometers

The track line coordinates for the Goleta survey on the R/V Snavely are:

Start_longitude	Start_latatitude	End_longitude	End_latatitude
-120.0050203	34.38978686	-120.192657	34.4210474
-120.002509	34.39212399	-120.191846	34.42366979
-119.9999977	34.39446097	-120.1910349	34.42629218
-119.9974861	34.39679798	-120.1902238	34.42891455
-120.1964631	34.41763205	-120.0073851	34.38573445
-120.1980301	34.41237879	-120.0107115	34.38078059
-120.1995969	34.40712541	-120.0140374	34.37582651
-120.2011635	34.401872	-120.017363	34.37087233
-120.044806	34.33692706	-120.2177585	34.36575048
-120.0359606	34.34647623	-120.214914	34.37630615
-120.0271132	34.35602473	-120.2120686	34.38686171
-120.0182638	34.36557239	-120.2092225	34.39741724
-119.8304749	34.34962061	-120.0048067	34.39264993
-119.8296764	34.35224353	-120.0022822	34.39484836
-119.8288779	34.35486635	-119.9997576	34.39704682
-119.8280792	34.35748916	-119.997233	34.39924514
-119.8366138	34.33146569	-120.0168121	34.37582393
-119.8351592	34.33674633	-120.013977	34.38076609
-119.8337044	34.34202694	-120.0111415	34.38570817
-119.8322494	34.34730751	-120.0083056	34.39065016
-119.8733811	34.22200406	-120.0872688	34.27408291
-119.8686922	34.23494494	-120.0789171	34.28613821
-119.8640017	34.24788553	-120.0705628	34.2981929
-119.8593096	34.26082593	-120.0622061	34.31024686
-119.8546159	34.27376596	-120.053847	34.32230002
-119.8499207	34.28670579	-120.0454853	34.33435256
-119.8452238	34.29964525	-120.0371211	34.34640438
-119.8405254	34.31258452	-120.0287546	34.35845539
-119.8358254	34.32552341	-120.0203855	34.37050577
-120.1910473	34.42030747	-120.3037337	34.42233753
-120.1900383	34.42299273	-120.3032434	34.425033
-120.189029	34.42567797	-120.3027532	34.42772847
-120.1880198	34.42836329	-120.3022628	34.43042385
-120.1990726	34.39934975	-120.3051331	34.40125366
-120.1968184	34.40471627	-120.304855	34.40665688
-120.194564	34.41008265	-120.3045769	34.4120601
-120.1923092	34.41544897	-120.3042987	34.41746332
-120.2127492	34.36542179	-120.3068169	34.3671696
-120.2091813	34.37481815	-120.3063539	34.37662559
-120.2056125	34.38421435	-120.3058907	34.38608157
-120.2020428	34.39361049	-120.3054272	34.39553752
-120.3005037	34.41944978	-120.4228912	34.36582776
-120.3005107	34.42250347	-120.4243227	34.36825844
-120.3005178	34.42555716	-120.4257541	34.37068919
-120.3005249	34.42861085	-120.4271857	34.37311993
-120.300532	34.43166454	-120.4286173	34.37555065

-120.3005389	34.43471822	-120.4300491	34.37798128
-120.300546	34.43777191	-120.4314809	34.38041197
-120.3040823	34.36763139	-120.3987691	34.32602399
-120.3035327	34.37551915	-120.4022744	34.33213248
-120.3029829	34.3834069	-120.4057803	34.33824088
-120.302433	34.39129462	-120.4092866	34.34434921
-120.3018829	34.39918233	-120.4127935	34.35045754
-120.3013327	34.40706994	-120.4163008	34.3565657
-120.3007823	34.41495761	-120.4198086	34.36267377

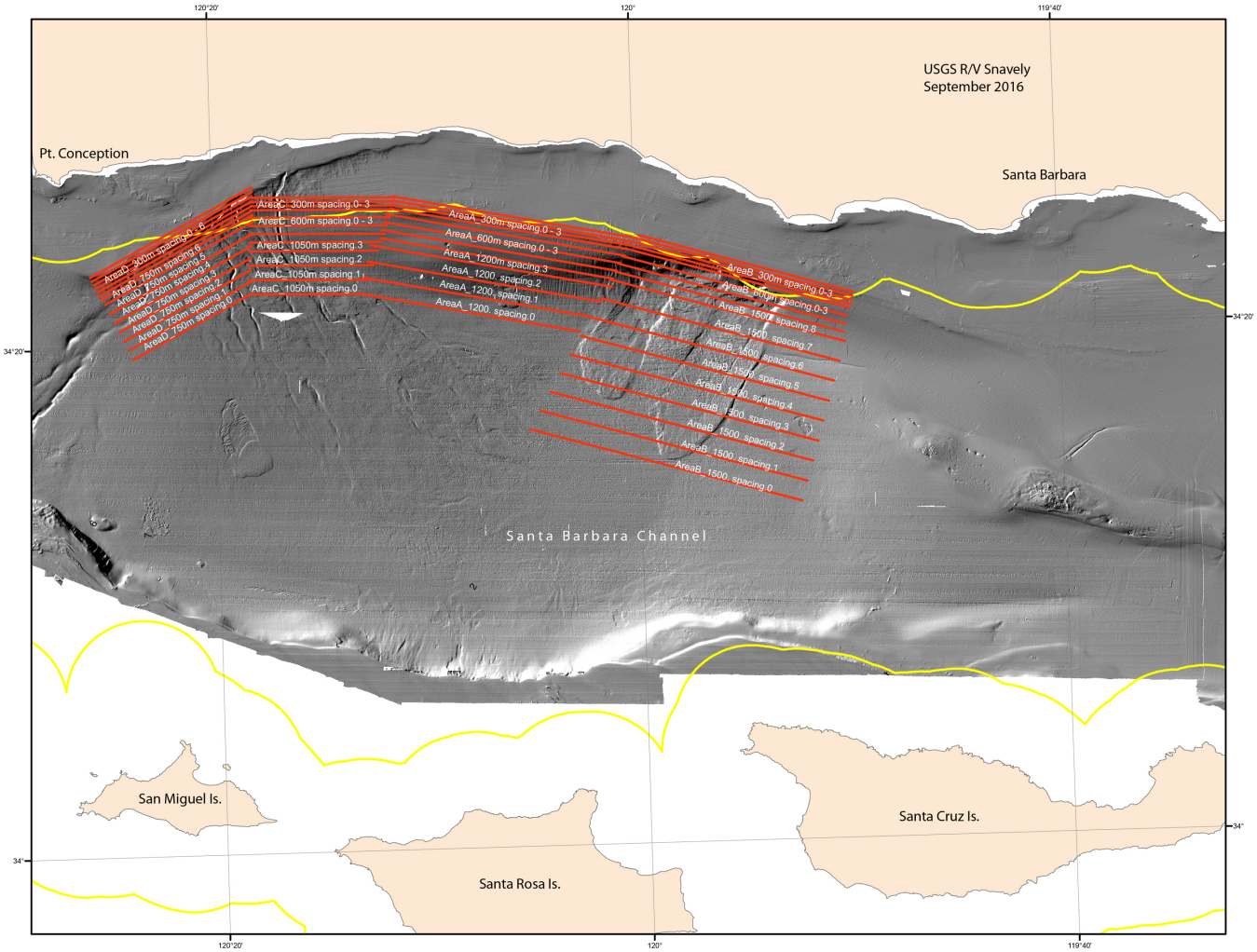

The track line coordinates for the Goleta survey on the R/V Shearwater are:

Start_longitude	Start_latatitude	End_longitude	End_latatitude
-119.9696018	34.41230513	-120.0158247	34.2324992
-119.9802752	34.41402405	-120.0263375	34.23475712
-119.9909492	34.41574207	-120.0368507	34.23701416
-120.0016236	34.41745917	-120.0473647	34.23927032
-120.0122986	34.41917536	-120.0578793	34.24152552
-120.0229741	34.42089073	-120.0683946	34.24377994
-120.03365	34.4226051	-120.0789105	34.24603348
-120.0443264	34.42431855	-120.0894268	34.24828606
-120.0550033	34.4260311	-120.099944	34.25053785
-120.0656809	34.42774273	-120.1104617	34.25278876
-120.0763588	34.42945345	-120.1209801	34.2550388
-120.0870373	34.43116335	-120.1314991	34.25728787
-120.0977163	34.43287225	-120.1420186	34.25953615
-120.1083957	34.43458023	-120.1525388	34.26178356
-120.1190757	34.4362873	-120.1630596	34.26403
-120.1297561	34.43799346	-120.1735811	34.26627565
-120.1404372	34.43969871	-120.1841032	34.26852043

-120.1511186	34.44140313	-120.1946259	34.27076433
-120.1618006	34.44310655	-120.2051492	34.27300726
-120.1724831	34.44480905	-120.2156731	34.2752494
-120.1831661	34.44651064	-120.2261977	34.27749066
-120.3034247	34.45234354	-120.2230336	34.32931635
-120.3132633	34.44846918	-120.2327993	34.325354
-120.3231009	34.44459407	-120.2425641	34.32139073
-120.3329377	34.44071803	-120.2523279	34.31742664
-120.3427736	34.43684115	-120.262091	34.31346172
-120.3526087	34.43296353	-120.2718531	34.30949606
-120.3624428	34.42908499	-120.2816144	34.30552949
-120.3722761	34.42520569	-120.2913748	34.3015621
-120.3821086	34.42132547	-120.3011342	34.29759387
-120.3919401	34.41744442	-120.3108929	34.29362492
-120.4017709	34.41356262	-120.3206507	34.28965505
-120.4116007	34.40967989	-120.3304075	34.28568436
-120.4214296	34.40579642	-120.3401635	34.28171284
-120.4312577	34.40191203	-120.3499186	34.27774059
-120.4340689	34.38733388	-120.3596728	34.27376743
-120.1979478	34.46364527	-120.2011147	34.36871834
-120.208855	34.46293181	-120.2133276	34.32820705
-120.2197621	34.46221746	-120.2241845	34.32848031
-120.2306691	34.46150203	-120.2350415	34.32875252
-120.2415759	34.46078562	-120.2458987	34.32902377
-120.2524827	34.46006823	-120.2567561	34.32929415
-120.2633893	34.45934985	-120.2676135	34.32956348
-120.2742958	34.45863049	-120.2784711	34.32983184
-120.2852021	34.45791015	-120.2893289	34.33009925
-120.378	34.436	-120.233	34.044
-120.229	34.044	-119.95	34.398
-120.307	34.454	-120.271	34.42
-120.258	34.423	-120.299	34.459
-120.292	34.464	-120.243	34.424
-120.41	34.238	-120.448	34.195
-120.387	34.166	-120.382	34.256
-119.93	34.267	-119.804	34.356
-119.77	34.345	-119.903	34.247

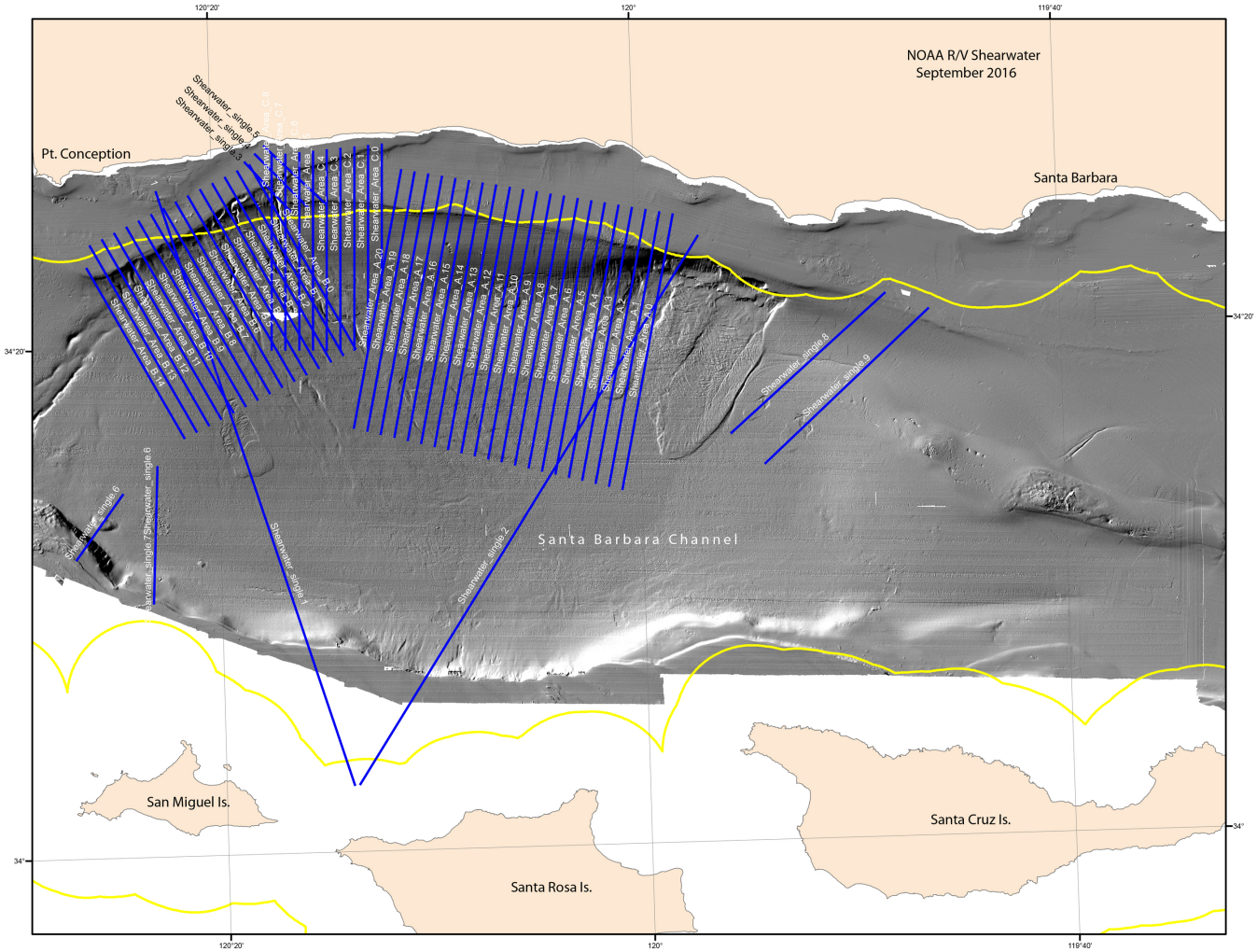
NOAA R/V Shearwater
September 2016
Pt. Conception
Santa Barbara
Santa Barbara Channel
San Miguel Is.
Santa Rosa Is.
Santa Cruz Is.
120°20'
120°
119°40'
34°20'
34°

White, Jennifer <jennifer_white@usgs.gov>

Pre-Survey Notice of Geophysical Survey Operations - Santa Barbara Basin - Geophysical Coordinator and Notice to Mariners

1 message

White, Jennifer <jennifer_white@usgs.gov> Tue, Aug 16, 2016 at 3:12 PM
To: slc.ogpp@slc.ca.gov, D11LNM@uscg.mil
Cc: "richard.greenwood" <Richard.Greenwood@slc.ca.gov>, "Keen, Kelly@SLC" <Kelly.Keen@slc.ca.gov>

PRE SURVEY NOTIFICATION FOR GEOPHYSICAL SURVEY

The USGS Pacific Coastal and Marine Science Center (PCMSC) will be conducting a geophysical survey under California State Lands Permit #8394. The two primary survey areas are southeast of San Miguel Island and along the mainland coast from Santa Barbara to Point Conception. Operations will include two vessels. The USGS research vessel Parke Snavely is a 36-foot aluminum catamaran and the NOAA research vessel Shearwater is a 62-foot aluminum catamaran. The Snavely will use a pole mounted Reson 7111 multibeam echo sounder and mini-sparker while the Shearwater operations will include a mini-sparker and towed camera system. The survey will be conducted from September 11 - October 1, 2016.

In keeping with our California State Lands Permit requirements, we are providing you with the attached Geophysical Pre-Survey Notice for your information.

--
Jenny White
Marine Operations Manager
Pacific Coastal and Marine Science Center
U.S. Geological Survey
(831) 818-8915 cell
(831) 460-7485 work

CSLC EXHIBIT F - Brothers and Cochrane SB 2016.docx
10749K

White, Jennifer <jennifer_white@usgs.gov>

Pre-Survey Notice of Geophysical Survey Operations - Santa Barbara Basin - Harbormasters

1 message

White, Jennifer <jennifer_white@usgs.gov> Tue, Aug 16, 2016 at 3:12 PM
To: CIHarborVisitors@ventura.org, jhiggins@venturaharbor.com, mkronman@santabarbaraca.gov, ktreiberg@santabarbaraca.gov, smarble@ocsd.org, harbormaster@portofhueneme.org
Cc: "richard.greenwood" <Richard.Greenwood@slc.ca.gov>, "Keen, Kelly@SLC" <Kelly.Keen@slc.ca.gov>

PRE SURVEY NOTIFICATION FOR GEOPHYSICAL SURVEY

The USGS Pacific Coastal and Marine Science Center (PCMSC) will be conducting a geophysical survey under California State Lands Permit #8394. The two primary survey areas are southeast of San Miguel Island and along the mainland coast from Santa Barbara to Point Conception. Operations will include two vessels. The USGS research vessel Parke Snavely is a 36-foot aluminum catamaran and the NOAA research vessel Shearwater is a 62-foot aluminum catamaran. The Snavely will use a pole mounted Reson 7111 multibeam echo sounder and mini-sparker while the Shearwater operations will include a mini-sparker and towed camera system. The survey will be conducted from September 11 - October 1, 2016.

In keeping with our California State Lands Permit requirements, we are providing you with the attached Geophysical Pre-Survey Notice for your information.

--
Jenny White
Marine Operations Manager
Pacific Coastal and Marine Science Center
U.S. Geological Survey
(831) 818-8915 cell
(831) 460-7485 work

CSLC EXHIBIT F - Brothers and Cochrane SB 2016.docx
10749K

White, Jennifer <jennifer_white@usgs.gov>

Pre-Survey Notice of Geophysical Survey Operations - Santa Barbara Basin - Dive Shops

1 message

White, Jennifer <jennifer_white@usgs.gov> Tue, Aug 16, 2016 at 3:12 PM
To: cmcdiver@aol.com, mail@centralcoastkayaks.com, info@santabarbarascuba.com, jeff@pacificwilderness.com, dive@scubadivela.com
Cc: "richard.greenwood" <Richard.Greenwood@slc.ca.gov>, "Keen, Kelly@SLC" <Kelly.Keen@slc.ca.gov>

PRE SURVEY NOTIFICATION FOR GEOPHYSICAL SURVEY

The USGS Pacific Coastal and Marine Science Center (PCMSC) will be conducting a geophysical survey under California State Lands Permit #8394. The two primary survey areas are southeast of San Miguel Island and along the mainland coast from Santa Barbara to Point Conception. Operations will include two vessels. The USGS research vessel Parke Snavely is a 36-foot aluminum catamaran and the NOAA research vessel Shearwater is a 62-foot aluminum catamaran. The Snavely will use a pole mounted Reson 7111 multibeam echo sounder and mini-sparker while the Shearwater operations will include a mini-sparker and towed camera system. The survey will be conducted from September 11 - October 1, 2016.

In keeping with our California State Lands Permit requirements, we are providing you with the attached Geophysical Pre-Survey Notice for your information.

--
Jenny White
Marine Operations Manager
Pacific Coastal and Marine Science Center
U.S. Geological Survey
(831) 818-8915 cell
(831) 460-7485 work

CSLC EXHIBIT F - Brothers and Cochrane SB 2016.docx
10749K

Marine Wildlife Mitigation Plan
Geophysical investigations of geologic hazards along the outer shelf and slope, Santa Barbara Basin

(September 11th – October 1st, 2016)

1.0 INTRODUCTION

This marine wildlife mitigation plan is prepared in compliance with the USGS Pacific Coastal and Marine Science Center's existing State Geophysical Permit PRC 8394. This plan is intended to provide guidance to USGS vessel operators and scientific field personnel collecting geophysical data for the Pacific Coastal and Marine Science Center (PCMSC) in Santa Cruz, CA to avoid significant impacts to marine wildlife that may occur during regular geophysical surveys.

1.1 Regulatory Basis

Species that are either currently in danger or soon likely to be in danger of extinction throughout all or a portion of its range are protected by the Endangered Species Act of 1973. The United States Fish and Wildlife Service (USFWS), and the National Oceanic and Atmospheric Administration (NOAA) National Marine Fisheries Service (NMFS) implement the Endangered Species Act. During the consultation with NMFS to issue a permit for the offshore geophysical survey, it was determined no incidental take permits are required to use the equipment identified in this document to conduct scientific data acquisition in federal waters offshore of the California coast.

1.2 Survey Purpose and Objectives

The USGS Pacific Coastal and Marine Science Center (PCMSC) will collect geophysical data (high-resolution seismic-reflection, multibeam bathymetry) and towed video camera data in both federal and California's State Waters, within the western Santa Barbara Channel. This work will occur primarily in federal waters and is designed to support USGS Marine Geologic Hazards Assessment projects, and also complement the seafloor mapping data collected in adjacent State Waters for the collaborative, multi-agency, California Seafloor Mapping Program (CSMP; http://walrus.wr.usgs.gov/mapping/csmp/). Data to be collected will document and enhance our understanding of surface and shallow-subsurface geologic framework, active earthquake faults, submarine landslides, potential tsunami sources, petroleum seeps, and subsurface fluid flow. Baseline information will be specifically used to monitor change and assess geologic hazards. The work and databases will also stimulate and enable new research and enhance public education and awareness. Information will be specifically used for the following purposes:

Geologic Hazard Assessment: This work maps near surface active faults, submarine landslides, seafloor seeps, and provides a 4D analysis of bathymetric changes over the past 20 years within the western Santa Barbara Channel. Measuring such changes in 4D will provide a better understanding of potentially tsunamagenic seafloor failure

processes occurring along the shelf edge and continental slope. In addition, information gained during this study will provide insight into fault slip rates and earthquake recurrence intervals. Such information is used to inform building codes, conduct risk assessments, and determine insurance rates, and has significant economic impact.

Marine Zoning Monitoring: Information on geologic framework (including sediment distribution and thickness), fluid-flow processes, and geologic hazards (such as potential earthquake and tsunami sources) is fundamental to all coastal and marine spatial planning activities.

Benthic Habitat Mapping: Information on surficial lithology and geomorphology will inform benthic habitat mapping effort in the area.

PCMSC will contact the NOAA Long Beach Office staff and local whale-watching operations to acquire information on the current composition and relative abundance of marine wildlife offshore as well as any pinniped haul out sites. Whale activity is moderate at the moment. Additionally, one day prior to survey activities, the NOAA Long Beach office, local whale watching operations will be contacted to get an update on marine wildlife sightings in the area. This information will be conveyed to the captain and crew prior to the survey.

The survey area will enter the Campus Point Marine Conservation Area, the Point Conception State Marine Reserve, and the Harris Point State Marine Reserve. Permit applications for operations in these areas have been submitted to the California Department of Fish and Wildlife. Seismic geophysics and towed camera work will be done in State Waters within the Channels Islands National Marine Sanctuary.

A review of environmental responsibility of project operations will be conducted by the chief scientist in charge of the survey operations prior to commencing the first day of operations. When new personnel will be in the crew, this training will be repeated at least for those new to the crew. They will be made aware of their individual responsibility and will be shown how to be aware of possible environmental impacts and how to mitigate them during the geophysical survey operations. Information relating to seasonality, as an indication of the types of animals that might be in our survey area, at the time of survey work will also be presented to the crew. A copy of this document will be provided to the crew of our survey vessel.

All personnel will be expected to be consistently aware that they are to be alert to any presence of marine wildlife while they are performing their duties. There are a number of signs/indications of marine wildlife presence and each crew member will be responsible to maintain vigilance for those signs within the constraints of their project duties. Some of those indications are:

a. <u>Sounds</u> - such as splashing, vocalizations (by animals and birds), and blowing (breathing).

b. <u>Visual indications</u> - birds aggregating, changes in water character such as areas of rippled water, white water caused by splashing, changes in color or shape of the ocean surface,

1.3 Survey Schedule and Layout

The survey is scheduled to commence field activities on September 11th and is expected to conclude October 1st, 2016. The survey will be conducted aboard the USGS R/V Parke Snavely and the NOAA Channel Islands National Marine Sanctuary R/V Shearwater. The R/V Parke Snavely will be departing and returning daily to Santa Barbara harbor, and will be acquiring multibeam and seismic-reflection data from September 11th-17th, and from September 25th-October 1st. The R/V Shearwater will be collecting seismic-reflection data from September 19th-27th. Images of the survey area are shown in Figures 1 and 2. The Surveys will be conducted along pre-established track lines (1 km line spacing for R/V Shearwater operations, progressively wider spacing with water depth (300-1200m) for R/V Parke Snavely operations). Proposed track lines extend along the mainland shelf break and continental slope (areas A, B, C and D; Figure 1). Additional track lines transect from the mainland shelf in the North, across the basin to the southern end Santa Barbara Channel, near Santa Rosa Island. The track lines run across multiple fault zones and submarine landslides, and will cover both State waters and Federal waters. The survey timing is designed to take advantage of relatively favorable annual marine conditions (low mean significant wave height and moderate seasonal winds). Seismic-reflection profiles and multibeam bathymetry will be collected consistent with standard geophysical survey techniques. The survey speed for both vessels will be around 4.5-5 nautical miles/hour.

One day of seismic profiling will be done in State waters within the Channel Islands National Marine Sanctuary (figure 3) followed by two days of towed video camera operations. The video survey area is shown in figure 3.

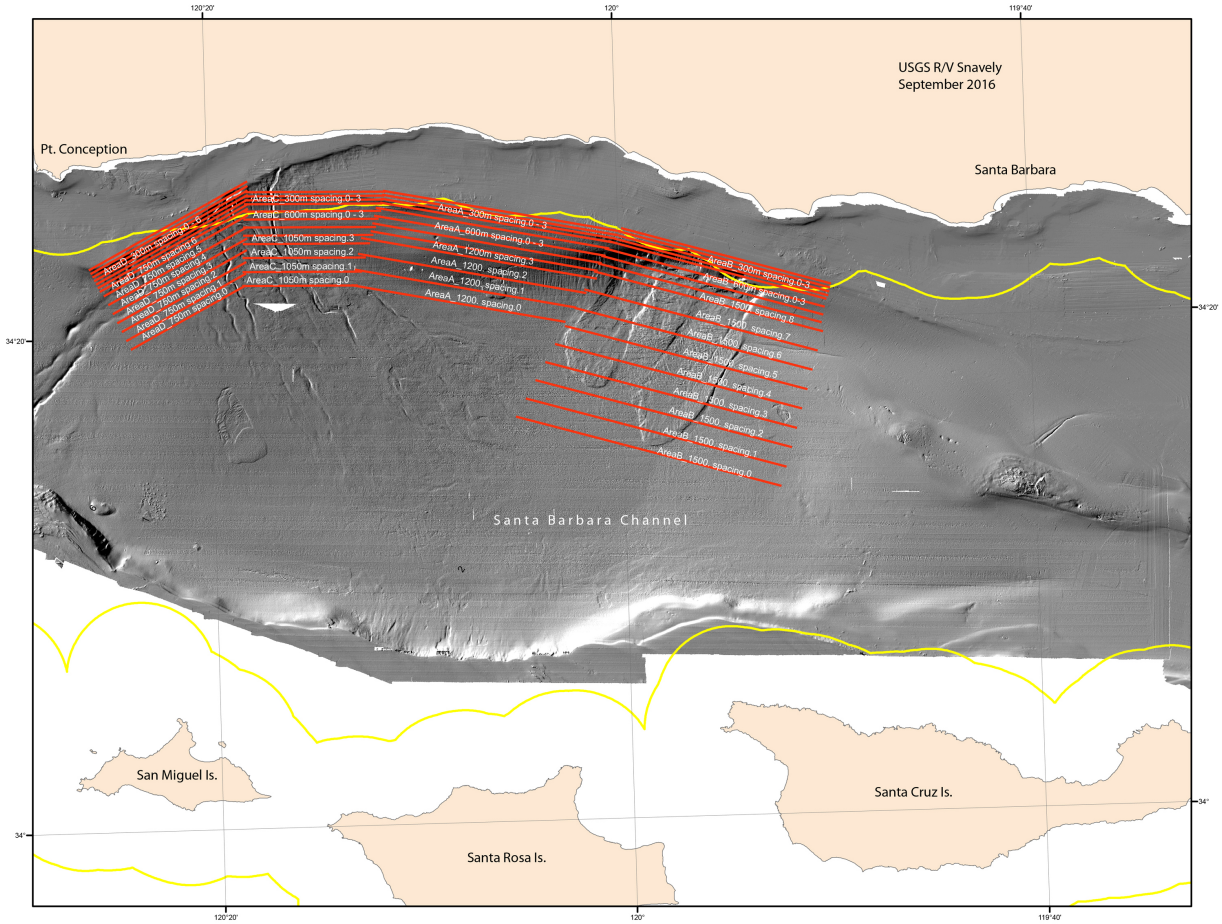

Figure 1. Region of Survey Area. Red lines are survey tracklines for daily operations onboard the R/V Parke Snavely

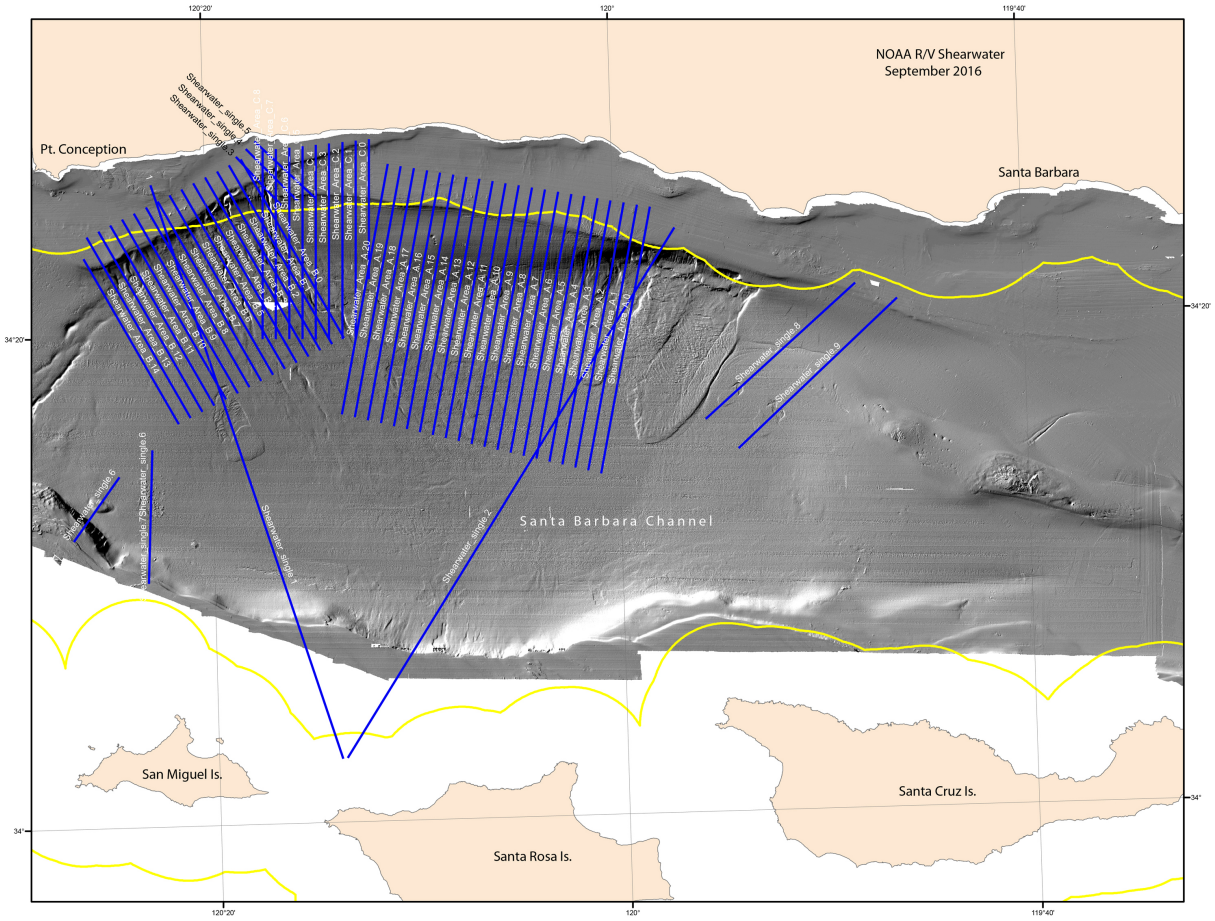

Figure 2. Region of Survey Area. Blue lines are survey tracklines for 24hr operations onboard the R/V Shearwater.

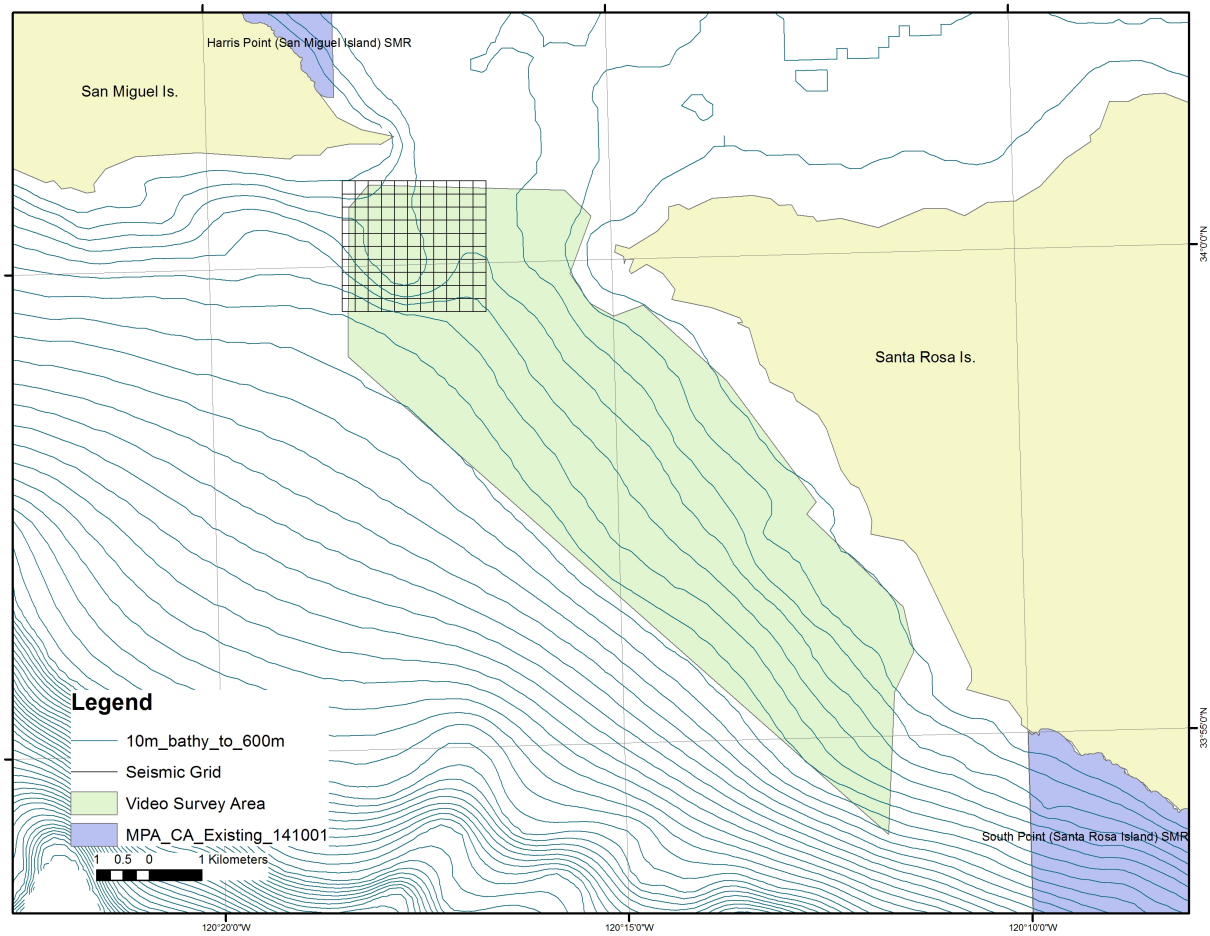

Figure 3. Map of seismic lines and area of video survey in State waters within the Channel Islands National Marine Sanctuary.

2.0 Survey Equipment and Activities

The survey vessel conducting only day operations will be the R/V Parke Snavely, a 36 foot long, aluminum-hulled catamaran owned and operated by U.S. Geological Survey PCMSC. High resolution seismic profile data will be collected during daylight hours using a low-energy (1.2 kJ) sparker seismic source and multichannel hydrophone streamer. In addition, bathymetry and water column data will be collected using a RESON 7111 multibeam sonar.

The survey vessel conducting 24hr operations will be the R/V Shearwater, Channel Islands National Marine Sanctuary's 62' high-speed Teknicraft catamaran. High resolution seismic-reflection data will be collected using a low-energy (1.2 kJ) sparker system in state waters only during daylight hours. Seismic data will be collected in federal waters during both daylight and nighttime hours.

USGS PCMSC proposes to use the following equipment to collect the required data:

- 1.2 kJ Sparker and Geometrics hydrophone array (active source)
- RESON 7111 multibeam sonar (active source)

The Santa Barbara Channel survey will require the use of two marine vessels and in-water equipment that generate noise during data acquisition. The results of modeling of the noise generated by the survey equipment is shown in Table 1. Those results indicate that the area within which the 160 dB re: 1µPa rms sound level (the level specified by NOAA as potentially harmful to sensitive marine mammals) can be observed by monitors onboard the survey vessel. Because the acoustic data will be collected at an approximate speed of 4.5 knots, no area of the seafloor will fall within the sensitive sound level radius for more than about one minute on any transect.

Table 1. Distances to Received Pressure Levels from Equipment Sound Source

Sounder System	Frequency (kHz)	Source Level (dB peak)	Source Level (dB rms)	Distance toSL160 dBrms (meters)	Distance to SL 180 dB (rms) (meters)	Distance toSL190 dB (rms) (meters)
Reson 7111 Seabat Multibeam Echosounder	100	226	213	200	42	15
Applied Acoustics 700 Mini Sparker	0.825	216	202	130	12	3
Applied Acoustics 1200 Mini Sparker	0.825	217	205	166	16	6

These estimates are based on the underwater sound propagation equation:

RSPL= SL-20log (R/Ro)-AR where,
RSPL=Recieved sound potential level
SL= RMS source level re. 1 uPa (rms) based on manufacturer's specifications
R= Distance
Ro= Reference Distance (1 m)
A= sound absorption coefficient

The greatest distance from the sound source to the 160 dB level for the proposed equipment is considered the "safety zone". Below are the “safety zones” for the equipment we plan to use.

Reson 7111 Multibeam: 500 meters

Applied Acoustics 700 Mini Sparker: 130 meters

Applied Acoustics 1200 Mini Sparker: 166 meters

3.0 Marine Wildlife

3.1 Marine Wildlife

The following discusses the marine wildlife that have been recorded within the project region, those taxa that are most likely to be within the project region during the survey, and methods that will be instituted by the vessel operator to reduce or eliminate potential impacts to marine wildlife during transit and survey operations. Assigned Marine Wildlife Observers

(MWO), the vessel master and others in the vessel wheelhouse will watch for marine wildlife and will institute the aforementioned mitigations.

Table 2 provides information on the seasonal variations in the marine wildlife that are expected to be or have been reported within the Project area.

Table 2: Abundance Estimates for Marine Mammals and Reptiles of California Unless Otherwise Indicated

Common Name *Scientific Name*	**Population Estimate**	**Current Population Trend**
REPTILES		
Cryptodira		
Olive Ridley turtle *Lepidochelys olivacea*	1.39 million (Eastern Tropical Pacific)**	Increasing
Green turtle *Chelonia mydas*	3,319-3,479** (Eastern Pacific Stock)	Increasing
Loggerhead turtle *Caretta caretta*	1,000 (California)**	Decreasing
Leatherback turtle *Dermochelys coriacea*	178 (California)**	Decreasing
MAMMALS		
Mysticeti		
California gray whale *Eschrichtius robustus*	18,017 (Eastern North Pacific Stock)	Fluctuating annually
Fin whale *Balaenoptera physalus*	2,624 (California/Oregon/Washington Stock)	Increasing off California
Humpback whale *Megaptera novaeangliae*	1,878 (California/Oregon/Washington Stock)	Increasing
Blue whale *Balaenoptera musculus*	2,046 (Eastern North Pacific Stock)	Unable to determine
Minke whale *Balaenoptera acutorostrata*	202 (California/Oregon/Washington Stock)	No long-term trends suggested
Northern right whale *Eubalaena japonica*	17 (based on photo-identification) (Eastern North Pacific Stock)	No long-term trends suggested
Sei whale *Balaenoptera borealls*	83 (Eastern North Pacific Stock)	No long-term trends suggested
Odontoceti		
Short-beaked common dolphin *Delphinus delphis*	343,990 (California/Oregon/Washington Stock)	Unable to determine
Long-beaked common dolphin *Delphinus capensls*	17,127 (California Stock)	Unable to determine
Dall's porpoise *Phocoenoides dalli*	32,106 (California/Oregon/Washington Stock)	Unable to determine
Harbor porpoise *Phocoena phocoena*	1,478 (Morro Bay Stock)	Increasing
Pacific white-sided dolphin *Lagenorhynchus obllquldens*	21,406 (California/Oregon/Washington Stock)	No long-term trends suggested
Risso's dolphin *Grampus griseus*	4,913 (California/Oregon/Washington Stock)	No long-term trends suggested
Short-finned pilot whale *Globicephala macrorhynchus*	465 (California/Oregon/Washington Stock)	No long-term trends suggested
Bottlenose dolphin *Turslops truncates*	684 (California/Oregon/Washington Offshore Stock)	No long-term trends suggested
	290 (California Coastal Stock)	No long-term trends suggested
Northern right whale dolphin *Llssopelphis borealis*	6,019 (California/Oregon/Washington Stock)	No long-term trends suggested
Sperm whale *Physeter macrocephalus*	751 (California/Oregon/Washington Stock)	No long-term trends suggested

Killer whale Orcinus orca	85 (Eastern North Pacific Southern Resident Stock)	Decreasing
	162 (Eastern North Pacific Offshore Stock)	No long-term trends suggested
Pinnipedia		
California sea lion *Zalophus californianus*	141,842 (U.S. Stock)	Unable to determine; increasing in most recent three year period
Northern fur seal *Callorhinus ursinus*	5,395 (San Miguel Island Stock)	Increasing
Guadalupe fur seal *Arctocephalus townsendi*	3,028 (Mexico Stock) Undetermined in California	Increasing
Northern (Steller) sea lion *Eumetopias jubatus*	2,479 California Stock	Decreasing
Northern elephant seal *Mirounga angustirostris*	74,913	Increasing
Pacific harbor seal *Phoca vitulina richardsi*	31,600	Stable
Fissipedia		
Southern sea otter *Enhydra lutris nereis*	2,711*	Unable to determine

Estimates provided by National Marine Fisheries Service (NOAA Fisheries 2011) *

Estimate provided by USGS (2010)

** Estimates provided by National Marine Fisheries Service (NMFS) (2004), Marquez, et al. (2002), Eguchi et ai. (2007), Benson et al. (2007), and NMFS (2007). Estimates are based on number of current numbers of nesting females.

During the transit periods, there is a potential for encountering marine wildlife and therefore onboard monitoring will occur. Table 3 lists those species that are likely to occur in the survey area.

Table 3. Marine Wildlife Species and Most Likely Periods of Occurrence within the Survey Area

Family Common Name	Month of Occurrence [1]											
	J	F	M	A	M	J	J	A	S	O	N	D
REPTILES												
Cyptodira												
Olive Ridley turtle *(T)* [2]												
Green turtle (T)[1],[2]												
Loggerhead turtle (T) [2]												
Leatherback turtle (E) [2]												
MAMMALS												
Mysticeti												
California gray whale												
Blue whale (E)												
Fin whale (E)												
Humpback whale (E)												
Minke whale												
Sei whale (E)												
Northern right whale (E)												
Odontoceti												
Short-beaked common dolphin												
Dall's porpoise												
Harbor porpoise												
Long-beaked common dolphin												
Pacific white-sided dolphin												
Risso's dolphin												
Sperm whale												
Short-finned pilot whale												
Bottlenose dolphin												
Northern right whale dolphin												
Killer whale												
Pinnipedia												
Northern fur seal [3]												
California sea lion												
Northern elephant seal [4]												
Pacific harbor seal												
Guadalupe fur seal (T)												
Steller sea lion												
Fissipedia												
Southern sea otter (T) [5]												
Relatively uniform distribution		Not expected to occur					Most likely to occur due to seasonal distribution					

(E) Federally listed endangered species.
(T) Federally listed threatened species.
(1) Not Used
(2) Rarely encountered, but may be present year-round. Greatest abundance during July through September.
(3) Only a small percent occur over continental shelf (except near San Miguel rookery, May-November).

(4) Common near land during winter breeding season and spring molting season.
(5) Only nearshore (diving limit 100 feet).
Sources: Bonnell and Dailey (1993), NOAA Fisheries (2011), NCCOS (2007)

4.0 ONBOARD MITIGATIONS

4.1 Fishing Gear Clearance

In addition to submitting the required Notice to Mariners that will advise commercial fishers of pending on-water activities, prior to the start of each survey day, the vessel will traverse the proposed survey corridor for that day to note and record the presence of deployed fishing gear. No survey lines within 30 m (100 ft) of the observed fishing gear will be completed. The survey crew will not remove or relocate any fishing gear; removal or relocation will only be accomplished by the owner or by an authorized California Department of Fish and Game (CDFG) agent.

4.2 Survey Monitoring

At all times during survey activities aboard both the Snavely and the Shearwater, marine wildlife observations will be taken. On the Shearwater, two designated marine wildlife monitors (MWO's) will be present. On the Snavely, at least one designated MWO will be present. Due to the small size (36ft) of the vessel, limited space allows for only one designated MWO. To help mitigate this situation, the vessel masters have experience with marine wildlife monitoring and will observe and announce any sightings.

The onboard MWO's shall have the authority to stop operations if a mammal or turtle is observed within the specified safety zone. We will make contact with the NOAA Long Beach office and local whale watching organizations prior to commencement of operations to acquire information on the current composition and abundance of marine wildlife offshore and convey sighting data to the vessel crew and MWO's prior to departure. The certification of MWO's is provided in Appendix A.

When the multibeam echosounder is in use, the MWO will survey an area at least 1000 m in all directions centered on the sound source throughout the period of time that the survey equipment is operating. This 1000 m visual range will encompass the 500 m safe radius distance. When the smaller sparker is in use, the MWO will survey an area at least 260 m in all directions centered on the sound source (towed array behind the vessel) throughout the period of time that the survey equipment is operating. This 260 m visual range will encompass the 130 m safe radius distance. When the larger sparker is in use, the MWO will survey an area at least 332 m in all directions centered on the sound source (towed array behind the vessel) throughout the period of time that the survey equipment is operating. This 332 m visual range will encompass the 166 m safe radius distance.

If a monitor observes a marine mammal approaching the safety zone, the equipment will be shut down and will be re-started (ramped up) only when the MWO is assured that there is no longer the possibility of marine wildlife entering the safety zone.

The onboard monitors will have the authority to require that operations be stopped if a mammal or turtle is observed approaching the specified safety zone or appears to be negatively affected by the survey activities. The monitors will also have the authority to recommend continuation (or cessation) of operations during periods of limited visibility (i.e. fog) based on the observed abundance of marine wildlife. Periodic reevaluation of weather conditions and reassessment of the continuation/cessation recommendation will be completed by the onboard monitors.

4.3 Mitigations During Transit and Survey

During daily transits, there is a potential for encountering marine wildlife. Onboard monitoring will be conducted by MWO's, the vessel master, and science crew. During transits the vessel will maintain a minimum distance of 100 m from observed animals. If the vessel master observes a marine mammal within the path of the transiting vessel, they will immediately slow the vessel and/or change course in order to avoid contact.

Cetaceans (whales) vary in their swimming patterns and duration of dives and therefore all shipboard personnel will be watchful as the vessel crosses the path of a whale or anytime whales are observed in the area.

If whales are observed during transits, the vessel master will institute the following measures:

- Maintain a minimum distance of 130 m from sighted whales;
- Do not cross directly in front of or across the path of sighted whales;
- When transit directions is parallel to whale path, maintain constant speed that is not greater than the whales speed, or alter transit direction away from whale path;
- Do not position the vessel in such a manner to separate female whales from their calves;
- If a whale engages in evasive or defensive action, slow the vessel and move away from the animal until the animal calms or moves out of the area.

During survey operations, the vessel will maintain survey a speed of 4-5 knots and will maintain a heading that coincides with survey track lines. If marine wildlife is observed within the vicinity of the vessel, the vessel master will take precautions to avoid proximity to marine wildlife (collision), ending and restarting the track line survey if necessary.

If a collision with marine wildlife occurs, the vessel master will document the conditions under which the accident occurred, including the following:

- Location of the vessel when the collision occurred (latitude and longitude);
- Date and time;

- Speed and heading of the vessel;
- Observed conditions (e.g., wind speed and direction, swell height, visibility in miles or kilometers, and presence of rain or fog);
- Species of marine wildlife contacted; and
- Organization, vessel ID and name of master in charge of the vessel at time of accident.

In accordance with NOAA requirements, after a collision, the vessel should stop, if safe to do so. The vessel may proceed after confirming that it will not further damage the animal by doing so. The vessel will then communicate by radio or telephone all details to the vessel's base of operations. The PCMSC Marine Operations Superintendent will contact the Stranding Coordinator, NMFS, Southwest Region, Long Beach, to obtain instructions. Alternatively, the vessel captain may contact the NMFS Stranding Coordinator directly using the marine operator to place the call or directly from an onboard telephone, if available to:

NOAA California Stranding Coordinator
National Marine Fisheries Service
501 West Ocean Blvd, Suite 4200
Long Beach, CA 90802-4213
562-980-4017
Contact: Justin Viezbicke
Email: justin.viezbicke@noaa.gov

It is unlikely that the vessel will be asked to stand by until NOAA or CDFG personnel arrive, however this will be determined by the Stranding Coordinator. According to the MMPA, the vessel operator is not allowed to aid injured marine wildlife or recover the carcass unless requested to do so by the NOAA Stranding Coordinator.

Although NOAA has primary responsibility for marine mammals in both state and federal waters, the CDFG will also be advised that an incident has occurred in state waters affecting a protected species. Reports should be communicated to the federal and state agencies listed below:

Federal	**State**	**State**
Justin Viezbicke, Stranding Coordinator Southwest Region National Marine Fisheries Service Long Beach, California (562) 980-4017	Enforcement Dispatch Desk California Department of Fish and Game Long Beach, California (562) 590-5132	California State Lands Commission Division of Environmental Planning and Management Sacramento, California (916) 574-1938

4.4 Operational Measures

Operational measures to reduce impacts to marine mammals or turtles will include: 1) soft-start technique, 2) acoustic safety zone radii, 3) slow vessel speeds, 4) avoidance of pinniped haul out sites, and 4) limitations on equipment usage.

a) Soft Start

The soft-start technique will involve initiating the sparker at the lowest practical sound level, increasing the output in such a manner as to increase in steps not exceeding approximately 6 decibels per 5-minute period. During this time, MWOs will monitor the safety zone for marine mammal or turtle sightings.

b) Safety Zone Monitoring

The safety zone monitoring will follow the protocols outlined in Exhibit H of the Permit (PRC 8394), which sets a safety zone of 500 m for the multibeam and 130 m or 166 m for the sparkers as specified in Table 1. In the event that a pinniped haul out site is located within 300 m of the survey boundary, USGS will take the following measures:

- Not approach within 300 m of the haul-out site (consistent with NMFS guidelines);
- Expedite survey activity in this area in order to minimize the potential for disturbance of pinnipeds on land;
- Have the MWM monitor pinniped activity onshore as the vessel approaches, observing and reporting on the number of pinnipeds potentially disturbed;
- Pinniped haul out site locations are described below.

Pinniped locations:
Harbor seals and California Sea Lions regularly haul out on beaches from Point Conception to Santa Barbara. No established breeding areas are known to exist in this area. On San Miguel Island northern elephant seals, California sea lions, northern fur seals and harbor seals all haul out and breed at varying times throughout the year.

The vessel will continuously monitor the daily survey area to ascertain the presence, species and location of any marine wildlife is apparent in the intended survey area. The MWO and onboard personnel will be watchful as the vessel crosses this path or anytime whales are observed in the area. The vessel operator shall observe the following guidelines:

- Make every effort to maintain distance from sighted marine mammals and other marine wildlife;
- Do not cross directly in front of (perpendicular to) migrating whales or any other marine mammal or turtle;
- When paralleling marine mammals or turtles, the vessel will operate at a constant speed that is not faster than that of the animals;

- Care will be taken to ensure female whales are not separated from their calves; and, if a whale engages in evasive or defensive action, the vessel will reduce speed or stop until the animal calms or moves out of the area.

c) Vessel Speed

Survey speeds for sparker seismic and mulitbeam sonar data acquisition will be approximately 4 to 5 knots for maximum data accuracy and data quality.

Survey speeds for towed video camera operations will be approximately 1 knot. Towed camera altitude above bottom is approximately 1 meter.

d) Limitations on equipment usage

Limitations on the frequency, pulse length, and pulse rate will be implemented to reduce potential harmful noises. For the multibeam sonar, the highest frequency band possible will be used and the shortest possible pulse length and lowest pulse rate (pings per second) will be used. In addition, the lowest energy (1.2 kJ) and lowest trigger rate will be used for the sparker seismic system.

4.5 Monitoring Reporting

A Post Survey Field Operations and Compliance Report will be submitted to CSLC staff as soon as possible but no more than 30 days after the completion of survey activities.

APPENDIX A: MARINE WILDLIFE OBSERVER CERTIFICATIONS

Since 2006, the USGS Pacific Coastal and Marine Science Center has provided trained marine mammal observers in support of low power geophysical surveys in California State Waters and Federal Waters under NOAA National Marine Fisheries (NMFS) jurisdictions. These surveys have been conducted under permit authorizations from California State Lands Commission (CSLC) (Permit# PRC 8394) and various NMFS Incidental Harassment Authorizations (IHAs) and Letters of Concurrence. PCMSC has provided training for 136 of their staff research scientists and science and technical support staff as marine wildlife observers (MWO) to support our geophysical surveys and meet our marine mammal mitigation obligations under pursuant to our CSLC and NMFS permit requirements.

The MWO training for our science and technical support staff is provided by Dr. James Harvey, a Professor of Marine Science at MLML and the Interim Director of MLML. Jim has taught courses on the biology and ecology of marine turtles, birds, and mammals for 22 years. Jim has also advised more than 70 graduate students as they obtained their M.S. degree, and has all of the instructional material (handouts, identification manuals, slides, video, etc.) for teaching this workshop.

The training has been conducted during several 2 day workshop at Moss Landing Marine Laboratories on the identification of marine mammal species, including handouts, slides, and video. All species of marine mammals in the area of planned USGS activities were discussed, their status and trends, and identifying features that allow species identification, and possibly differentiation between sexes and age classes. The workshop participants were instructed in the "normal" behaviors of marine mammals using visual explanations, slides, and video. A typical data sheet was prepared and participants were instructed how they would complete the data form. The rationale for the need for trained observers and importance of the data was emphasized. This training concluded with an observational cruise aboard an MLML vessel on Monterey Bay to observe the marine mammals discussed in the course in their natural setting and receive identification tips and other information in a field setting similar to that which they would expect during science operations.

PCMG Certified Marine Mammal Observers

Observer Name	Staff Position
Alicia Balliser-Gee	Science Support
Ginger Barth	Research Scientist
Jayne Bormann	Science Support
Daniel Brothers	Research Scientist
Katherine Coble	Research Scientist
Guy Cochrane	Research Scientist
Jamie Conrad	Research Scientist
Peter Dartnell	Science Support
Pete Dal Ferro	Science Support - Vessel Master
Theresa Fregoso	Science Support

Observer Name	**Staff Position**
Steven Hartwell	Science Support
Patrick Hart	Research Scientist
Sam Johnson	Research Scientist
Simon Klemperer	Research Scientist
Sean Paul LaSelle	Science Support
Tom Lorenson	Science Support
Brent Lunghino	Science Support
Tom Parsons	Research Scientist
Carol Reiss	Science Support
Ray Sliter	Science Support
Mike Torresan	Science Support
Peter Triezenberg	Science Support
Steve Watt	Research Scientist
Janet Watt	Research Scientist
Jenny White	Science Support - Vessel Master
Jeff Beeson	Science Support

U.S. GEOLOGICAL SURVEY
PACIFIC COASTAL AND MARINE GEOLOGY SCIENCE CENTER

MANAGEMENT OF ACCIDENTAL DISCHARGE AND VESSEL INCIDENTS DURING OFFSHORE GEOPHYSICAL SURVEYS

1.0 INTRODUCTION

The survey operations will be conducted aboard the USGS Research Vessel Parke Snavely, a 36 foot aluminum catamaran powered by twin Volvo Penta diesel engines. Because of the vessel's relatively small size, it is anticipated that response to any operational spills will be quickly identified and response will be initiated quickly and efficiently by the vessel master and on board designated vessel crew. At the initiation of each project or project phase, a spill management review will be conducted by the vessel master who is in all cases the responsible authority. Oil spills in United States (U.S.) marine waters shall be reported immediately.

2.0 OPERATIONAL SPILLS

Operational spills might involve one or more of the following substances carried on board the vessel: (i) fuel; (ii) lube oil; (iii) hydraulic oil; or (iv) waste oil. The vessel is equipped with a Buffalo Quick-Response Oil Spill Kit, which includes socks for fast spill containment (three 4" socks), woven polypropylene sheets (15 sheets) for rapid absorption of surface oil and protective gear, protective gloves (1 pair), disposal bag (1), and a set of instructions. This oil spill kit is located in the forward cabin of the vessel. This spill kit is rated to clean up 5 gallons of liquid. All of the liquids (listed below) that could cause a hazardous spill are either in the fuel tank or are located in the aft deck engine maintenance compartment of the vessel. Thus, if a spill occurred, these would be contained in the engine or maintenance compartments or, or if a grounding or instance occurred that punctured the gas tank, this would leak into the water, which is beyond the scope of our cleanup efforts. In the event a spill occurred in the engine compartment, the oil spill kit would be used to contain the hazardous liquids and the bilge would not be emptied until it could be pumped out at a hazardous waste facility. We do not anticipate a spill of greater than 5 gallons.

(i) Fuel:

A spill kit shall be available for use in the event of a spill. If the fuel is spilled on the deck, it shall be immediately removed, bagged and disposed of at an appropriate hazardous waste reception facility. In the event of spillage in the water, the vessel master shall notify the Coast Guard and port facility.

(ii) Lube oil:

A spill kit shall be available for use in the event of a spill. If the oil is spilled on deck or in the machinery space, it shall be immediately removed, bagged and disposed of at an appropriate hazardous waste reception facility. In the event of spillage in the water, the vessel master shall notify the Coast Guard and port facility.

(iii) Hydraulic oil:

A spill kit shall be available for use in the event of a spill. If the oil is spilled on deck or in the machinery space, it shall be immediately removed, bagged and disposed of at an appropriate hazardous waste reception facility. In the event of spillage in the water, the vessel master shall notify the Coast Guard and port facility.

(iv) Pipe leakage:

The vessel master shall check the piping and rubber hose daily for leakage. Where leakage is found, it shall be repaired immediately, in the event of leakage, the vessel deck engineer shall secure valve(s) at the appropriate tank before repairing the leak. Spilled fuel on the vessel shall be immediately removed, bagged and disposed of at an appropriate hazardous waste reception facility. In the event of spillage in the water, the vessel master shall notify the Coast Guard and port facility.

3.0 EMPLOYEE TRAINING ON OIL SPILL CONTINGENCY PLAN

Prior to the launching of the vessel for any activities, all captain and crew members on the vessel will have read the Oil Spill Contingency Plan, understand procedures to be implemented in the event of an oil spill, and know where the oil spill kit is located on the vessel.

4.0 VESSEL FUELING

All vessel fueling will be conducted at an approved docking facility. No cross vessel fueling will be performed. Appropriate spill avoidance measures during filling procedures will be observed.

5.0 PRIORITY ACTIONS TO ENSURE PERSONNEL AND VESSEL SAFETY

Safety of vessel personnel and the vessel are paramount. In the event that a crewman's injuries require outside emergency assistance, the PCMSC safety officer shall be contacted immediately and emergency personnel contacted. While awaiting emergency assistance, the on board vessel master or qualified vessel crew personnel will render first aid and/or CPR. The nearest emergency medical facilities for this area is:

Santa Barbara College Hospital
400 W Pueblo St, Santa Barbara, CA 93105
(805) 682-7111

6.0 MITIGATING ACTIVITIES

If safety of both the vessel and the personnel has been addressed, the vessel master shall care for the following issues:

- Assessment of the situation and monitoring of all activities as documented evidence.

- Care for further protection of the personnel, use of protective gear, assessment of further risk to health and safety.
- Containment of the spilled material by absorption and safe disposal within leak proof containers of all used material onboard until proper delivery ashore, with due consideration to possible fire risk.
- Decontamination of personnel after finishing the cleanup process.

All personnel shall refer to the MSDS's on board for additional information.

7.0 EMERGENCY CONTACTS FOR STATE AND FEDERAL AGENCIES

Petroleum-based product spills that enter the water must be reported as soon as practicable, without compromising the crew's ability to contain the spill. The spill shall be reported to both the nearest US Coast Guard station and the CINMS shoreside point of contact. Reporting requirements may be satisfied using either VHF radio frequencies, cell phone, or satellite phone. Contact *each* of the following four entities to report the spill event.

- US Coast Guard National Spill Response Center (800-424-8802).
- West Coast Oil Spill Hotline (800-OILS-911).
- California Department of Fish and Game (888-334-2258).
- CINMS shoreside POC. The POC may then direct you to place follow-up call(s) to additional emergency response personnel.

The information reported should include:

- Vessel name and call sign
- Vessel location
- Type of material spilled and estimated quantity
- Date and time when the spill occurred
- Actions taken to control or contain the spill
- Description of obvious impacts on local wildlife, if known
- Additional information requested by the response personnel handling your call
- Other information that may be of use (i.e. other involved vessels in the area)

Additionally, California Department of Fish and Game certified wildlife rescue/response organizations will be contacted about the spill. In the Southern California area, these include the following contacts:

Oiled Wildlife Care Network
1-877-UCD-OWCN

California Wildlife Center
310-458-9453

South Bay Wildlife Rehab
310-378-9921

U.S. GEOLOGICAL SURVEY
PACIFIC COASTAL AND MARINE SCIENCE CENTER

MANAGEMENT OF ACCIDENTAL DISCHARGE AND VESSEL INCIDENTS DURING OFFSHORE GEOPHYSICAL SURVEYS

1.0 INTRODUCTION

The survey operations will be conducted aboard the NOAA Research Vessel *Shearwater,* owned and operated by the Channel Islands National Marine Sanctuary in Santa Barbara, CA. Because of the vessel's size, it is anticipated that response to any operational spills will be quickly identified and response will be initiated quickly and efficiently by the vessel master and on board designated vessel crew. At the initiation of each project or project phase, a spill management review will be conducted by the vessel master who is in all cases the responsible authority. Oil spills in United States (U.S.) marine waters shall be reported immediately.

2.0 PETROLEUM BASED SPILL RESPONSE

The intent of this section is to identify measures to aid in the prevention of petroleum-based product spills, to provide spill response, containment, and reporting procedures, and to provide additional information that may be useful when dealing with a spill.

2.1 Prevention

Prevention is the most effective way to avoid the safety hazards and environmental damage that oil spills present. Measures of prevention include:

- Maintaining all machinery and equipment in good condition. Particular attention should be paid to all fuel system components (hoses, valves, filters, tanks, vents, etc.); hydraulic system components (pumps, hoses, seals, motors, rams, etc.); and equipment containing lubricating oils (main engine, generator engine, winch gear boxes, reduction gear). Inspections should be conducted in accordance with the departure checklist carried in these Orders.
- Exercising care during fueling to avoid tank overflows. Given *SHEARWATER'S* large fuel capacity, "topping off the tanks should not be required for normal operations.
- Inspecting and maintaining any scientific equipment containing petroleum-based products.

2.2 Containment

In the event of a leak or spill, attempt to contain the spill using any of the following measures.

- □ Shut down all involved equipment if it is safe to do so (i.e. best practice may dictate that survey equipment be recovered and secured on-deck before attempting to address a hydraulic system leak/spill).
- □ Isolate or interrupt the spill by cutting supply lines, where applicable.
- □ Contain the spill by placing physical and/or absorbent barriers "downstream" of the spill. Sorbent pads, rags, towels, paper towels, or similar material may help to contain and/or clean up a minor spill. Spilled material that reaches the bilges should be left there and pumped at a shoreside facility, unless safety concerns dictate otherwise.

2.3 Recovery and Cleanup

Spills on deck should be contained and cleaned up immediately to prevent migration into the water, and to remove related hazards, such as the potential for slipping. Enclosed spaces should be ventilated (where applicable) and Personal Protective Equipment (PPE) donned prior to initiating any clean-up actions. Any recovered product, including absorbent materials saturated with petroleum-based product should be retained in plastic bags or buckets for shoreside disposal. If clean-up requires the use of soap and water, retain all such liquids and their by-products for shoreside disposal. The use of detergents to disperse spilled product is strictly prohibited by federal law.

Spilled material that enters the water may be contained or recovered using various materials onboard *SHEARWATER,* but the containment and recovery of any significant discharge will likely require professional assistance. Either way, contact the authorities immediately, as directed in the following section.

2.4 Oil Spill Containment Material Carried Aboard *SHEARWATER*

- □ 1 or more bales of sorbent pads
- □ 1 large bag of rags

2.5 Petroleum Products Carried Aboard *SHEARWATER*

Material Safety Data Sheets (MSDS) for each of the following petroleum-based products are carried onboard the vessel.

- □ Low Sulfur Diesel Fuel, 1,200 gallon capacity. The fuel is carried in two 600-gallon tanks located aft of the port and starboard main engine spaces.

- □ AW-46 Hydraulic Oil, 40 gallon capacity. Hydraulic oil is carried in one tank in the port main engine space, forward, and a second tank in the starboard main engine space, forward.

- □ 15W40 Lube Oil, approximately 12 quarts. These spare quarts are stowed in the aft storage areas of both main engine spaces.

- □ 30W Transmission Lube Oil, approximately 2 gallons. These spare gallons are stowed in the aft storage areas of both main engine spaces.

3.0 VESSEL FUELING

All vessel fueling will be conducted at an approved docking facility. No cross vessel fueling will be performed. Appropriate spill avoidance measures during filling procedures will be observed.

4.0 PRIORITY ACTIONS TO ENSURE PERSONNEL AND VESSEL SAFETY

Safety of vessel personnel and the vessel are paramount. In the event that a crewman's injuries require outside emergency assistance, the PCMSC safety officer shall be contacted immediately and emergency personnel contacted. While awaiting emergency assistance, the on board vessel master or qualified vessel crew personnel will render first aid and/or CPR. The nearest emergency medical facilities for this area is:

Santa Barbara College Hospital
400 W Pueblo St, Santa Barbara, CA 93105
(805) 682-7111

5.0 MITIGATING ACTIVITIES

If safety of both the vessel and the personnel has been addressed, the vessel master shall care for the following issues:

- Assessment of the situation and monitoring of all activities as documented evidence.
- Care for further protection of the personnel, use of protective gear, assessment of further risk to health and safety.
- Containment of the spilled material by absorption and safe disposal within leak proof containers of all used material onboard until proper delivery ashore, with due consideration to possible fire risk.
- Decontamination of personnel after finishing the cleanup process.

All personnel shall refer to the MSDS's on board for additional information.

6.0 EMERGENCY CONTACTS FOR STATE AND FEDERAL AGENCIES

Petroleum-based product spills that enter the water must be reported as soon as practicable, without compromising the crew's ability to contain the spill. The spill shall be reported to both the nearest US Coast Guard station and the CINMS shoreside point of contact. Reporting requirements may be satisfied using either VHF radio frequencies, cell phone, or satellite phone. Contact *each* of the following four entities to report the spill event.

- US Coast Guard National Spill Response Center (800-424-8802).
- West Coast Oil Spill Hotline (800-OILS-911).
- California Department of Fish and Game (888-334-2258).
- CINMS shoreside POC. The POC may then direct you to place follow-up call(s) to additional emergency response personnel.

The information reported should include:

- Vessel name and call sign
- Vessel location
- Type of material spilled and estimated quantity
- Date and time when the spill occurred
- Actions taken to control or contain the spill
- Description of obvious impacts on local wildlife, if known
- Additional information requested by the response personnel handling your call
- Other information that may be of use (i.e. other involved vessels in the area)

Additionally, California Department of Fish and Game certified wildlife rescue/response organizations will be contacted about the spill. In the Southern California area, these include the following contacts:

Oiled Wildlife Care Network
1-877-UCD-OWCN

California Wildlife Center
310-458-9453

South Bay Wildlife Rehab
310-378-9453

CALIFORNIA AIR RESOURCES BOARD TIER 2 ENGINE CERTIFICATION

MM-AIR-1: Engine Tuning, Engine Certification, and Fuels

The following information is provided as required for compliance with Mitigation Measure *(MM) AIR-1: Engine Tuning, Engine Certification, and Engine Fuels*. The USGS Research Vessel Parke Snavely is a 36 ft., 2007 catamaran work boat. The vessel was built for USGS by Armstrong Marine in Port Angeles, WA and was delivered with two Volvo Penta D6-310 HP diesel engines. These engines comply with IMO NOx limits and the comprehensive emission requirements (EU RCD and US EPA Tier 2, rating 5 Marine Leisure and rating 4 Marine Commercial).

Regarding the NOx emissions, MM AIR-1 states that daily NOx emissions should not exceed 100 pounds based on engine certification emission factors. This can be accomplished with Tier 2 engines if daily fuel use is 585 gallons or less. This vessel holds 200 gallons and we estimate maximum daily fuel consumption of 50 gallons.

See the Volvo Penta Product Bulletin for the manufacturer's specifications for these engines.

Life- and Rescue Boat Propulsion Engines

D4/D6 SOLAS

132-272 kW (180-370 hp) crankshaft power acc. to ISO 8665

New powerful D4/D6 SOLAS range

Volvo Penta has now introduced a new powerful SOLAS approved range for use in fast rescue boats, lifeboats and tender boats: the D4-180, D4-225, D4-260, D6-280, D6-310, D6-330, and D6-370 common rail marine diesel engines with rating 4 and 5 power settings. The engines are SOLAS approved for both inboard, waterjet and sterndrive propulsion.

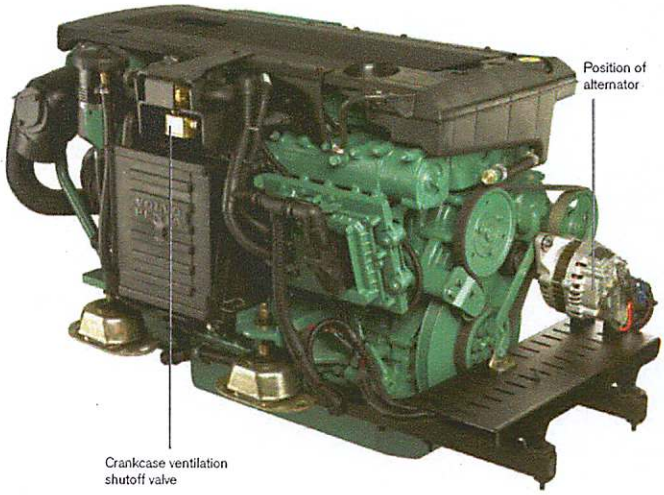

Designed to withstand the tough Life- and Rescue boat environment

The D4/D6 Life- and Rescue boat engines are designed to comply with the requirements in the following regulations and standards:

- Council Directive 96/98/EC, as amended by Commission Directive 2002/75/EC
- SOLAS 74 Convention, as amended, Reg. III/4 and Reg. III/34
- LSA Code
- IMO Resolution MSC. 48(66)
- IMO Res. MSC. 81(70), Part 1, paras. 6.10.2 to 6.10.6 and 6.14.6 to 6.14.8.
- U.S.C.G.

SOLAS specifications

The SOLAS regulations specify the following demands for the engine:

- Withstand free fall of the lifeboat from 3 meters
- Withstand a lateral impact of 3.5 m/s of the lifeboat
- Stop automatically on capsizing and easily restart
- Fuel and lubricating systems shall prevent the loss of fuel and oil during capsizing
- Work submerged in water to the crankshaft centerline
- Work for not less than 5 min. after starting cold with the lifeboat out of the water
- Run properly at an angle of up to 10° trim and an angle of up to 20° list, either way
- Manual starting system or power starting system with two independent sources
- The lifeboat engine shall be designed to limit electromagnetic emissions
- The engine to be started without heater down to -15°C (-30°C with heater)

Standard high performance engines

All SOLAS engines are based on standard engine designs with SOLAS kits mounted and are tested in factory before delivery to boat builders. The major changes are a new position of the existing alternator and a new crankcase ventilation shutoff valve.

The design will extend the engine by approx. 270 mm in fore end to accommodate the new position of the alternator. The void space can be used to accommodate the batteries, as usual. See the drawing on page 2 for more information regarding dimensions of the SOLAS kit for D4/D6.

The SOLAS kit also includes a tilt switch, to be mounted on the engine bulkhead.

The base engine mounts are originally designed for high G-forces. Thus, there is no need for extra reinforcement for fast rescue boats and lifeboat applications to meet the SOLAS demands.

EVC for full control in all situations

All engines are equipped with EVC-C, the latest development in engine control and instrumentation for Volvo Penta marine engines, for easy installation and easy handling.

A propulsion package fully matched, tested and supported by one company

The engines and the drives are developed and produced by Volvo Penta, and the service of the engines will be well taken care of by more than 5,000 Volvo Penta commercial and leisure dealers around the world.

Meeting new emission standards

The common rail injection system in combination with electronics and an advanced combustion system are setting new standards in minimizing noxious emissions and particulates. The engines comply with IMO NOx limits and the comprehensive emission requirements EU RCD and US EPA Tier 2 rating 5 Marine Leisure, rating 4 Marine Commercial).

Certificate

The engines will be delivered with a certificate and marked with a wheelmark in accordance with the MED/SOLAS regulations.

VOLVO PENTA

7748549 - Downloaded from www.volvopenta.com 4/22/2008 3:21:17 AM

D4/D6 SOLAS

Technical description

For full technical information and performance data for the D4 and D6 engines, please see the product bulletins and technical data sheets for the selected power setting and model of D4 and D6 engine family.

Technical Data

Crankshaft power + dry weight BT inboard

D4-180:
@ 2800 rpm, kW (hp) 132 (180)
kg (lb)..... 482 (1063)

D4-225:
@ 3500, kW (hp) 165 (225)
kg (lb)..... 482 (1063)

D4-260:
@ 3500 rpm, kW (hp) 191 (260)
kg (lb)..... 482 (1063)

D6-280:
@ 3500 rpm, kW (hp) 206 (280)
kg (lb)..... 580 (1279)

D6-310:
@ 3500 rpm, kW (hp) 228 (310)
kg (lb)..... 580 (1279)

D6-330:
@ 3500 rpm, kW (hp) 243 (330)
kg (lb)..... 580 (1279)

D6-370:
@ 3500 rpm, kW (hp) 272 (370)
kg (lb)..... 580 (1279)

Battery

Minimum requirements for cold start:
- 12V, 1150 CCA for D4 engines
- 12V , 2300 CCA for D6 engines

Cold starting device

2 kW engine coolant heater to be installed for coldstarts below -15°C (down to -30°C)

Reverse gear

- Reverse gear with matched drop center and 8° down angle for compact installation and minimum propeller shaft angle.
- Bevel gears which results in smooth running at all speeds
- Hydraulically operated clutch for smooth shifting
- Electrical shifting performed by electro-magnetic valves
- Seawater-cooled oilcooler

Waterjet

- For selection of waterjet please contact your waterjet dealer.

Sterndrive DPH/DPR

- Complete with transom shield, and installation components
- Max tilt angle 50° (adjustable)
- Protective zinc anodes to prevent corrosion
- Built-in kick-up function to reduce possible damage, in the event the drive strikes an underwater object
- Electrical shifting performed by electronic actuator
- Power Trim with one-button operation in twin installation
- Fully integrated water inlet and exhaust system
- Fully hydraulic power-assisted steering system
- Isolated propellers to prevent corrosion

Contact your local Volvo Penta dealer for further information.

Not all models, standard equipment and accessories are available in all countries. All specifications are subject to change without notice.

The engine illustrated may not be entirely identical to production standard engines.

Dimensions

Dimensions shown are additional dimensions for SOLAS kit on D4 and D6. Not for installation.
For more dimensions, please refer to the respective product bulletin and installation drawing.

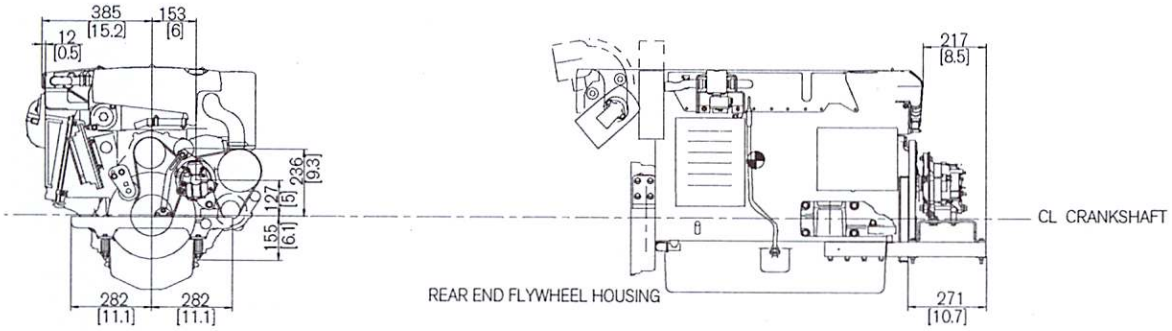

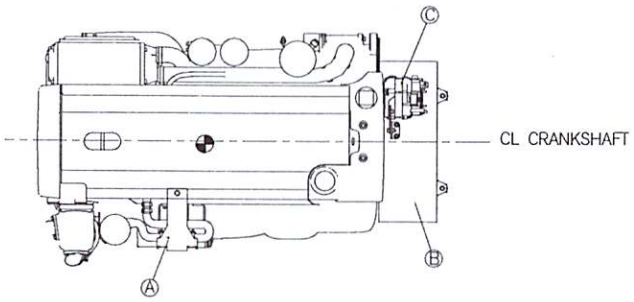

Ⓐ CRANKCASE VENTILATION

Ⓑ UNIVERSAL BRACKET

Ⓒ NEW PLACEMENT FOR ALTERNATOR

AB Volvo Penta
SE-405 08 Göteborg, Sweden
www.volvopenta.com

10-2007. © 2007 AB Volvo Penta.

7748549 - Downloaded from www.volvopenta.com 4/22/2008 3:21:17 AM

CALIFORNIA AIR RESOURCES BOARD TIER 2 ENGINE CERTIFICATION RESEARCH VESSEL SHEARWATER

MM-AIR-1: ENGINE TUNING, ENGINE CERTIFICATION, AND FUELS

The following information is provided as required for compliance with Mitigation Measure *(MM) AIR-1: Engine Tuning, Engine Certification, and Engine Fuels*. The Research Vessel *Shearwater* is a 62 ft. 2003 aluminum catamaran built for NOAA by All American Marine in Bellingham, WA and was delivered with two Detroit Diesel Series 60 diesel engines. These engines comply with IMO NOx limits and the comprehensive emission requirements (EU RCD and US EPA Tier 2, rating 5 Marine Leisure and rating 4 Marine Commercial).

The manufacturer's specifications for these engines is provided below.

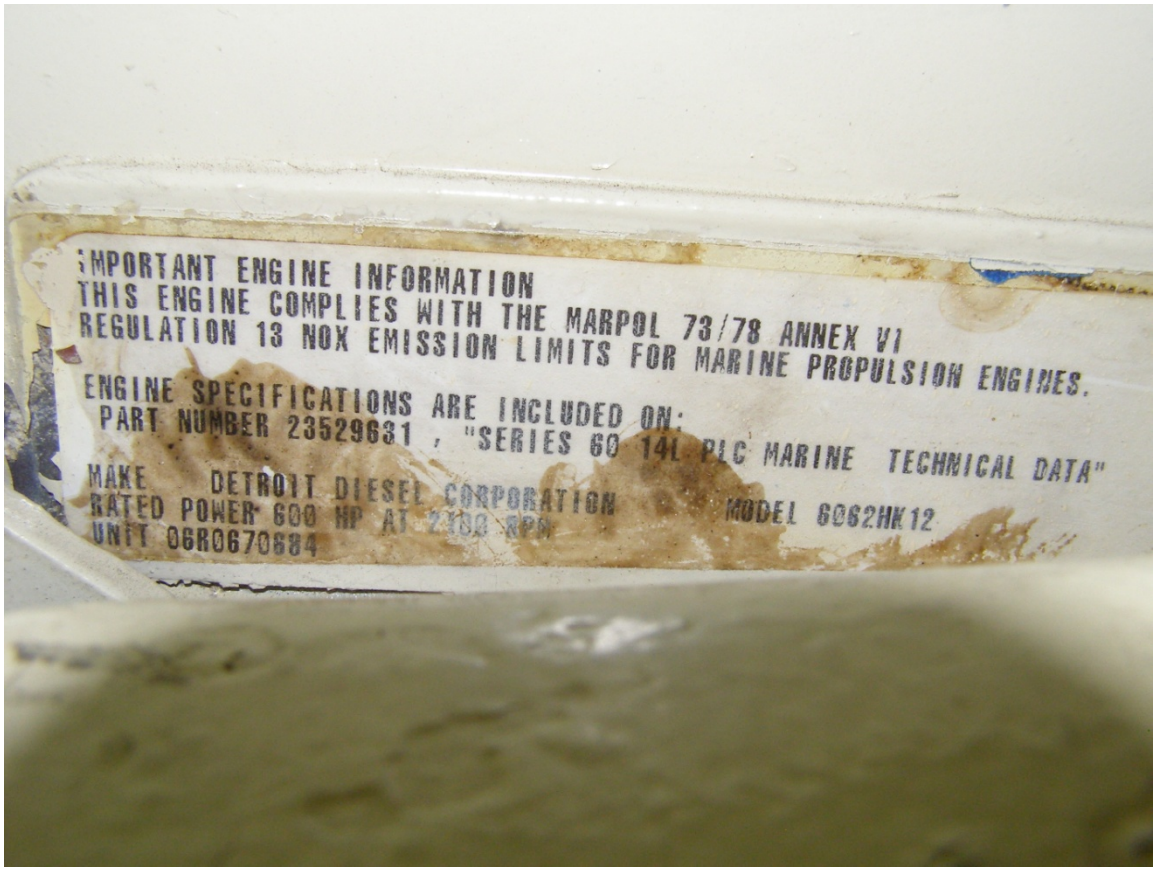
IMPORTANT ENGINE INFORMATION
THIS ENGINE COMPLIES WITH THE MARPOL 73/78 ANNEX VI
REGULATION 13 NOX EMISSION LIMITS FOR MARINE PROPULSION ENGINES.
ENGINE SPECIFICATIONS ARE INCLUDED ON:
PART NUMBER 23529631 , "SERIES 60 14L PLC MARINE TECHNICAL DATA"
MAKE DETROIT DIESEL CORPORATION
MODEL 6062HK12
RATED POWER 600 HP AT 2100 RPM
UNIT 06R0670684

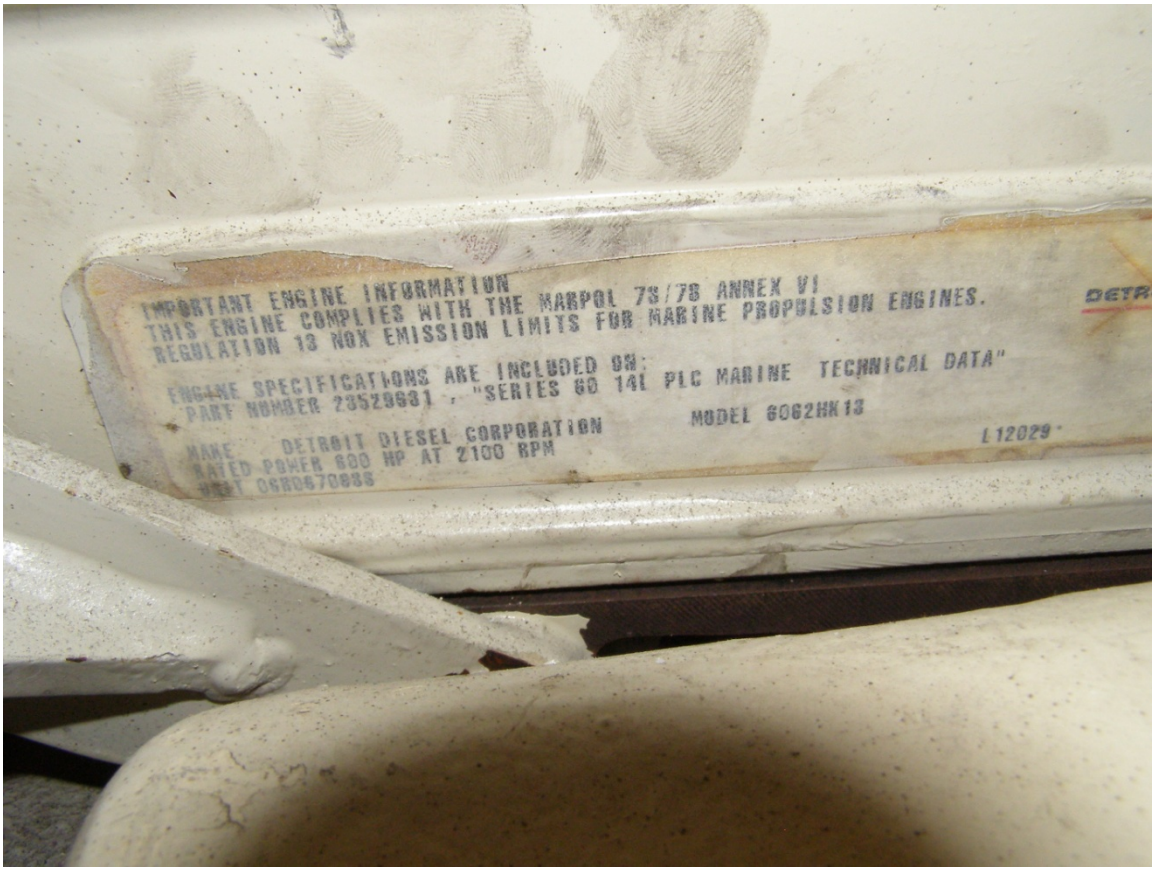
IMPORTANT ENGINE INFORMATION
THIS ENGINE COMPLIES WITH THE MARPOL 73/78 ANNEX VI
REGULATION 13 NOX EMISSION LIMITS FOR MARINE PROPULSION ENGINES.
ENGINE SPECIFICATIONS ARE INCLUDED ON:
PART NUMBER 23529631 , "SERIES 60 14L PLC MARINE TECHNICAL DATA"
MAKE DETROIT DIESEL CORPORATION
MODEL 6062HK13
RATED POWER 600 HP AT 2100 RPM
L12029

Diesel Engines Series 60

for Marine Applications

Maximum Continuous 1B

354 - kW

480 - mhp

475 - bhp

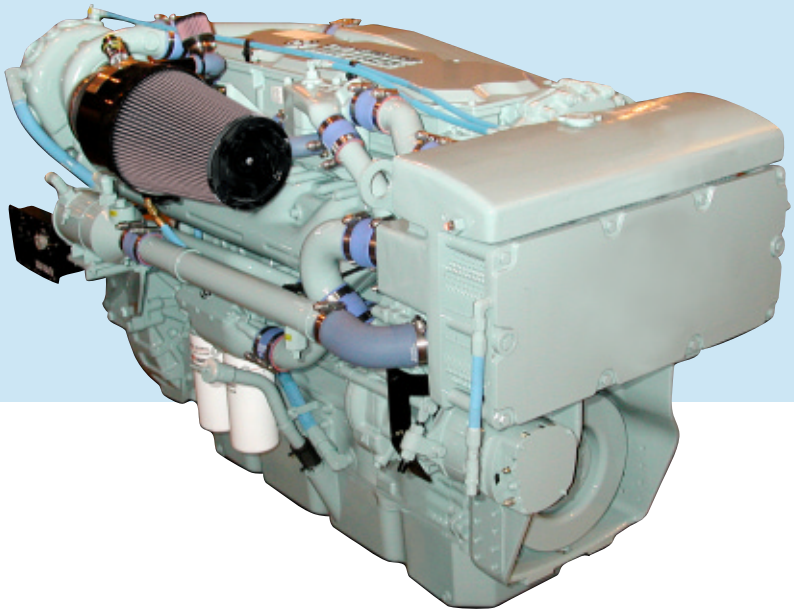

Compliant
with MARPOL 73/78 (IMO)
Annex VI NO_x Limits
EPA Tier II

Engine Specifications	
Version	In-line 6 cylinder
Displacement	14.0 liters (855 cu in)
Bore and Stroke	133 mm x 168 mm
	(5.24 in. x 6.61 in.)
Description	Turbocharged
	and charge air cooled
Governor	DDEC
Port Model	6062HK33/35
Starboard Model	6062HK32/34

Standard Power Rating				
Air Temp. 25˚C	kW	mhp	bhp	rpm
Sea Water Temp. 25˚C				
Rated Power	354	480	475	2100
Rating Conditions	SAE J 1228			

Standard Boat Profile
100% Power, 50% Time
85% Power, 25% Time
<15% Power, 25% Time

Typical applications
- Crew Boats
- Water Taxis
- Pilot Boats
- Ferry Boats
- Patrol Boats

DaimlerChrysler Off-Highway

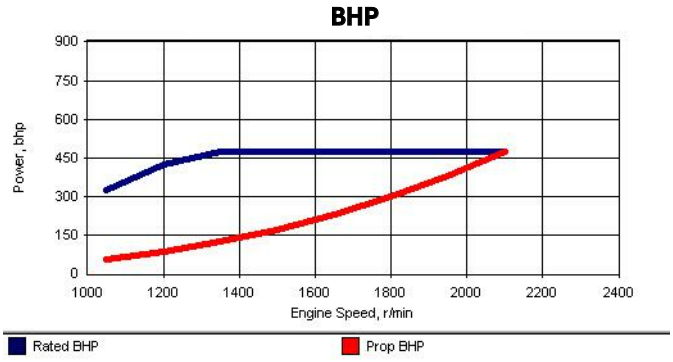

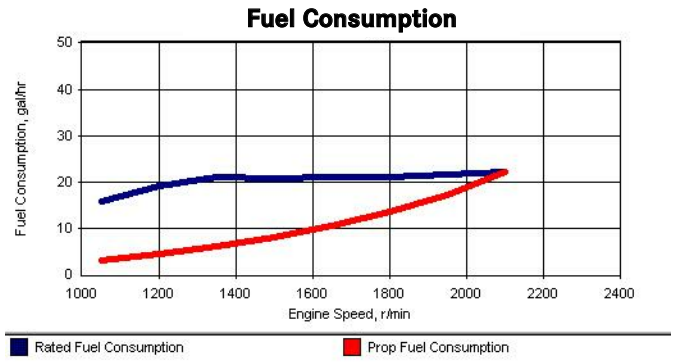

Power output guaranteed within +2/-0% at SAE J1228 conditions:
77∞F (25∞C) air inlet temperature
29.31 in. Hg (99 kPa) dry barometer
100∞F (38∞C) fuel inlet temperature
.853 specific gravity at 60∞F (15∞C)

Performance shown includes:
Air intake restriction: 10 in. H_2O (2.5kPa)
Exhaust back pressure: 15 in. H_2O (3.7kPa)
Fuel Density: 7.11 lb/gal

Rating Definition - Maximum Continuous

The marine continuous-maximum rating applies to medium to high speed commercial boats that operate at moderate to low load factors. Duration of full throttle operation is limited to 75% of total operating time.

Dimensional Information - Heat Exchanged

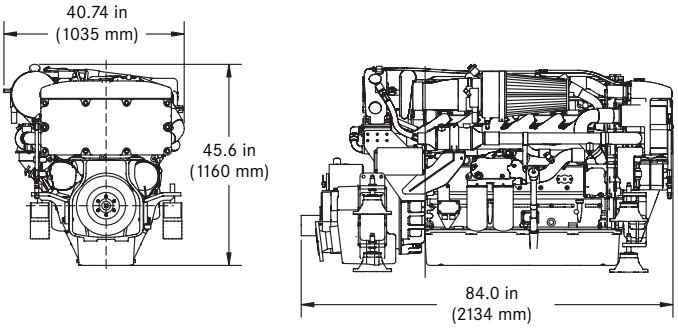

Dry Weight w/ TD5114A Marine Gear:4,240 lbs. (1923 kg)

Dimensional Information - Keel Cooled

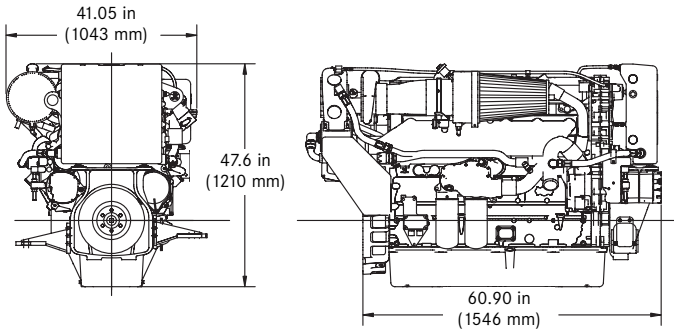

Dry Weight w/o Marine Gear:3,525 lbs. (1599kg)

All dimensions are approximate. For complete dimensional information, refer to installation drawing provided by your authorized Detroit Diesel Corporation representative. Marine transmission shown represents standard option marine gear.

Standard Equipment

Main Engines - Water-cooled exhaust components; Aluminum flywheel housing size SAE #1, "Workboat Blue" finish

Fuel System - Electronic unit injection system; secondary fuel filter mounted on engine

Engine Oil System - Dual filters mounted on engine

Engine Cooling System (6062HK34/35) - Titanium plate modular heat exchanger system with integral fuel cooler; sea water cooled charge air cooler; gear driven self-priming raw water pump with 2.5" inlet

Engine Cooling System (6062HK32/33) - Engine equipped for Keel cooling including expansion tank, separate circuit cooling pump, engine fuel cooler, and marine gear oil cooler

Air Inlet System - Air intake filter with silencer and closed breather system; 24V emergency air shutdown

Electrical - Starter: 24V, Alternator: 24V/100 amp, belt driven

Engine Mounting - Engine mounts with isolators or solid mount

Marine Gear - DDC shallow case electric shift marine gear; gear oil cooler in raw water circuit

Port/STBD Engine Configuration - For ease of service and maintenance

Optional Equipment

Flywheel Housing - Cast iron

Engine Lube System - Remote mount lube oil filters – single or double

Electrical - 12V starter; 12V alternator/130 amp; 12V Amot air shutdown

Accessory Drives - SAE A (front gear train), Front crankshaft pulley for use with V-belts & interface for remote PTO

Transmission - Deep case, Down Angle

Transmission Options – Trolling valve, companion flange and PTO

Exhaust – Raw water cooled stainless elbow (heat exchanger cooled only)

Front PTO – Direct Drive Front PTO rated at either 350 or 525 ft. lbs.

Marine Society Certification - Available upon request

For more information contact your MTU or DDC distributor.All Detroit Diesel distributors in NAFTA are authorized MTU distributors.
www.mtu-online.com/www.detroitdiesel.com/marine@detroitdiesel.com

Series 60 is a trademark of Detroit Diesel Corporation. MTU is a registered trademark of MTU Motoren- und Turbinen-Union Friedrichshafen.
4SA475ev 0310 As technical advancements continue, specifications will change. Photograph represents a typical marine engine. Printed in U.S.A.

U.S. GEOLOGICAL SURVEY
PACIFIC COASTAL AND MARINE SCIENCE CENTER

GEOPHYSICAL SOUND SOURCE SYSTEMS MAINTENANCE RECORD

Reson 7111 Seabat Multibeam Echo Sounder

1.0 Introduction

The USGS Pacific Coastal and Marine Science Center (PCMSC) owns and operates a broad range of geophysical sound sources, seafloor mapping systems, geologic and geotechnical sediment sampling systems, and oceanographic instrument systems. This requires considerable technical and operational support to successfully undertake and complete its field programs. Operational and technical support for these systems is provided by the PCMSC Marine Operations Facility (Marfac) in Santa Cruz, CA. Our Marfac group is staffed by a team of ten ocean engineers, electronics technicians, and marine engineering technicians. They operate, maintain and repair all geophysical and oceanographic systems used to support all of PCMSC's scientific field operations.

The USGS-owned Reson 7111 Seabat Multibeam Echo Sounder was given a thorough checkout and complete electrical test as per manufacturer's recommended procedures in August, 2016. All tests were passed and the system was determined to be within specified operational parameters.

Jenny White

Jenny White, Marine Operations Manager

8/4/16

Date

SeaBat - [7113 100kHz 301beam ED]

General Configuration Help

Primary Display | BITE [00] | 3-D Bathy - Disabled | Side Scan | Snippets

Datagram Watch - 1 Hz update rate

Time	Record Type
22:44:03.375	7010
22:44:03.375	7038
22:44:03.375	7503
22:44:03.546	7501
22:44:03.546	7501
22:44:03.592	1022
22:44:03.703	1022
22:44:03.530	7000
22:44:03.530	7002
22:44:03.530	7004
22:44:03.530	7010
22:44:03.530	7038
22:44:03.530	7503
22:44:03.717	7501
22:44:03.717	7501
22:44:03.796	1022
22:44:03.703	7000
22:44:03.703	7002
22:44:03.703	7004
22:44:03.703	7010
22:44:03.703	7038
22:44:03.703	7503
22:44:03.858	7501
22:44:03.858	7501
22:44:03.889	1022
22:44:04.000	1022
22:44:03.858	7000
22:44:03.858	7002
22:44:03.858	7004

Freeze

NO ALARM

BITE Status | Link Module | Link Control | 7kCenter

Ping Statistics

PCI Ping Rate:	6.0 p/s
PCI Wait Timer:	53.66msec
Calculation Method:	Travel Time /
Dispatcher Ping Rate:	6.0 p/s
SeaBat Ping Rate:	6.1 p/s
DMA Timeouts:	0
PCI Pings Dropped:	0
DataProcess Pings Dropped:	0
Sequencer Pings Dropped:	0

Clear Statistics

Software Version

7kCenter: 3.4.6.2

FPGA0 ID: Version N/A

SeaBat7k: 3.11.2.3

Ship Motion Data

Roll:	0.00°	Heading:	0.0°
Pitch:	0.00°	Speed:	
Heave:	0.00m	Latitude:	
		Longitude:	

Main Sonar Settings | Bathy Settings | Ocean Menu | Primary Display Settings | Data Recording | Screen Recording | I/O Module Setup

Device List

Compass,PosMV ethernet 102, UDP ,localhost, Port 0
External clock,Generic ZDA + 1PPS,COM1,38400 Baud,DataBits=8,Parity None,StopBits=1
Positioning system Geogs,PosMV ethernet 102+104, UDP ,localhost, Port 0
Sound Velocity,Valeport miniSVS,COM2,19200 Baud,DataBits=8,Parity None,StopBits=1
VRU,PosMV ethernet 102, UDP ,localhost, Port 0

Controls

New
Edit
Remove
QC

Device Status Display

Alarm: PosMV ethernet 102+104, Status 10, No Data In Buffer
Alarm: PosMV ethernet 102, Status 10, No Data In Buffer.
Alarm: PosMV ethernet 102, Status 10, No Data In Buffer.
Alarm: Generic ZDA + 1PPS, Status 10, No Data In Buffer!
Alarm: Valeport miniSVS, Status 10, No Data In Buffer.

Clear Status Display

SeaBat - [7113 100kHz 301beam ED]

General Configuration Help

Primary Display | BITE [00] | 3-D Bathy - Disabled | Side Scan | Snippets

Datagram Watch - 1 Hz update rate

Time	Record Type
22:41:52.452	7038
22:41:52.452	7503
22:41:52.609	7501
22:41:52.609	7501
22:41:52.625	1022
22:41:52.734	1022
22:41:52.609	7000
22:41:52.609	7002
22:41:52.609	7004
22:41:52.609	7010
22:41:52.609	7038
22:41:52.609	7503
22:41:52.780	7501
22:41:52.780	7501
22:41:52.827	1022
22:41:52.937	1022
22:41:52.780	7000
22:41:52.780	7002
22:41:52.780	7004
22:41:52.780	7010
22:41:52.780	7038
22:41:52.780	7503
22:41:52.952	7501
22:41:52.952	7501
22:41:53.030	1022
22:41:52.937	7000
22:41:52.937	7002
22:41:52.937	7004
22:41:52.937	7010

Freeze

NO ALARM

BITE Status | Link Module | Link Control | 7kCenter

Board	Uplink	Downlink	Bite
LM	22:41:54	22:41:53	22:41:54
LCU	22:41:54	22:41:53	22:41:54

Main Sonar Settings | Bathy Settings | Ocean Menu | Primary Display Settings | Data Recording | Screen Recording | I/O Module Setup

Device List

Compass,PosMV ethernet 102, UDP ,localhost, Port 0
External clock,Generic ZDA + 1PPS,COM1,38400 Baud,DataBits=8,Parity None,StopBits=1
Positioning system Geogs,PosMV ethernet 102+104, UDP ,localhost, Port 0
Sound Velocity,Valeport miniSVS,COM2,19200 Baud,DataBits=8,Parity None,StopBits=1
VRU,PosMV ethernet 102, UDP ,localhost, Port 0

Controls

New
Edit
Remove
QC

Device Status Display

Alarm: PosMV ethernet 102+104, Status 10, No Data In Buffer
Alarm: PosMV ethernet 102, Status 10, No Data In Buffer.
Alarm: PosMV ethernet 102, Status 10, No Data In Buffer.
Alarm: Generic ZDA + 1PPS, Status 10, No Data In Buffer!
Alarm: Valeport miniSVS, Status 10, No Data In Buffer.

Clear Status Display

SeaBat - [7113 100kHz 301beam ED]

General Configuration Help

Primary Display | BITE [00] | 3-D Bathy - Disabled | Side Scan | Snippets

Datagram Watch - 1 Hz update rate

Time	Record Type
22:43:39.421	7004
22:43:39.421	7010
22:43:39.421	7038
22:43:39.421	7503
22:43:39.592	7501
22:43:39.592	7501
22:43:39.655	1022
22:43:39.577	7000
22:43:39.577	7002
22:43:39.577	7004
22:43:39.577	7010
22:43:39.577	7038
22:43:39.577	7503
22:43:39.750	1022
22:43:39.764	7501
22:43:39.764	7501
22:43:39.859	1022
22:43:39.750	7000
22:43:39.750	7002
22:43:39.750	7004
22:43:39.750	7010
22:43:39.750	7038
22:43:39.750	7503
22:43:39.921	7501
22:43:39.921	7501
22:43:39.952	1022
22:43:40.062	1022
22:43:39.905	7000
22:43:39.905	7002

Freeze

NO ALARM

BITE Status | Link Module | Link Control | 7kCenter

Firmware Versions

Controller CPLD	0x1	Controller DSP Boot	0x1803
Controller FPGA	0x2221	Controller DSP System	0x2802

Controller Sensors

FPGA Die Temperature (°C)	66.06
Humidity (%RH)	34.40

Controller Voltages

2.5Vref	2.50
1.5V	1.52
3.3MEM.V	3.36
3.3V	3.35
2.5V	2.54
1.0V	1.02

Remote Voltages

3.3V	3.35
2.5Vref	2.50

Main Sonar Settings | Bathy Settings | Ocean Menu | Primary Display Settings | Data Recording | Screen Recording | I/O Module Setup

Device List

Compass,PosMV ethernet 102, UDP ,localhost, Port 0
External clock,Generic ZDA + 1PPS,COM1,38400 Baud,DataBits=8,Parity None,StopBits=1
Positioning system Geogs,PosMV ethernet 102+104, UDP ,localhost, Port 0
Sound Velocity,Valeport miniSVS,COM2,19200 Baud,DataBits=8,Parity None,StopBits=1
VRU,PosMV ethernet 102, UDP ,localhost, Port 0

Controls

New
Edit
Remove
QC

Device Status Display

Alarm: PosMV ethernet 102+104, Status 10, No Data In Buffer
Alarm: PosMV ethernet 102, Status 10, No Data In Buffer.
Alarm: PosMV ethernet 102, Status 10, No Data In Buffer.
Alarm: Generic ZDA + 1PPS, Status 10, No Data In Buffer!
Alarm: Valeport miniSVS, Status 10, No Data In Buffer.

Clear Status Display

SeaBat - [7113 100kHz 301beam ED]

General Configuration Help

Primary Display | BITE [00] | 3-D Bathy - Disabled | Side Scan | Snippets

Datagram Watch - 1 Hz update rate

Time	Record Type
22:43:10.375	7038
22:43:10.375	7503
22:43:10.545	7501
22:43:10.545	7501
22:43:10.593	1022
22:43:10.687	1022
22:43:10.545	7000
22:43:10.545	7002
22:43:10.545	7004
22:43:10.545	7010
22:43:10.545	7038
22:43:10.545	7503
22:43:10.718	7501
22:43:10.718	7501
22:43:10.781	1022
22:43:10.703	7000
22:43:10.703	7002
22:43:10.703	7004
22:43:10.703	7010
22:43:10.703	7038
22:43:10.703	7503
22:43:10.890	7501
22:43:10.890	7501
22:43:10.890	1022
22:43:10.984	1022
22:43:10.875	7000
22:43:10.875	7002
22:43:10.875	7004
22:43:10.875	7010

Freeze

NO ALARM

BITE Status | Link Module | Link Control | 7kCenter

Firmware Versions

Controller CPLD	0x1	Controller DSP Boot	0x1803
Controller FPGA	0x3320	Controller DSP System	0x2709

Controller Sensors

FPGA Die Temperature (°C)	61.50

Controller Voltages

2.5Vref	2.50
1.5V	1.53
3.3V	3.38
2.5V	2.56
1.0V	1.00

Main Sonar Settings | Bathy Settings | Ocean Menu | Primary Display Settings | Data Recording | Screen Recording | I/O Module Setup

Device List

Compass,PosMV ethernet 102, UDP ,localhost, Port 0
External clock,Generic ZDA + 1PPS,COM1,38400 Baud,DataBits=8,Parity None,StopBits=1
Positioning system Geogs,PosMV ethernet 102+104, UDP ,localhost, Port 0
Sound Velocity,Valeport miniSVS,COM2,19200 Baud,DataBits=8,Parity None,StopBits=1
VRU,PosMV ethernet 102, UDP ,localhost, Port 0

Controls

New
Edit
Remove
QC

Device Status Display

Alarm: PosMV ethernet 102+104, Status 10, No Data In Buffer
Alarm: PosMV ethernet 102, Status 10, No Data In Buffer.
Alarm: PosMV ethernet 102, Status 10, No Data In Buffer.
Alarm: Generic ZDA + 1PPS, Status 10, No Data In Buffer!
Alarm: Valeport miniSVS, Status 10, No Data In Buffer.

Clear Status Display

U.S. GEOLOGICAL SURVEY
PACIFIC COASTAL AND MARINE SCIENCE CENTER

GEOPHYSICAL SOUND SOURCE SYSTEMS MAINTENANCE RECORD

Applied Acoustics CSPD-700 Sparker

1.0 Introduction

The USGS Pacific Coastal and Marine Science Center (PCMSC) owns and operates a broad range of geophysical sound sources, seafloor mapping systems, geologic and geotechnical sediment sampling systems, and oceanographic instrument systems. This requires considerable technical and operational support to successfully undertake and complete its field programs. Operational and technical support for these systems is provided by the PCMSC Marine Operations Facility (Marfac) in Santa Cruz, CA. Our Marfac group is staffed by a team of ten ocean engineers, electronics technicians, and marine engineering technicians. They operate, maintain and repair all geophysical and oceanographic systems used to support all of PCMSC's scientific field operations.

A Field Operation Test was completed on the USGS-owned Applied Acoustics CSPD-700 sparker power supply in August 2016 (results below). The equipment is operating at specified operational parameters and fully compliant with Applied Acoustics stated capabilities and specifications.

Jenny White

Jenny White, Marine Operations Manager

8/16/16

Date

CSPD Field Operation Test

Model Type:	**CSPD 700**
Unit S/N:	2080489
Supply Voltage:	117 VAC

Instructions

These tests **MUST** be carried out with the HV charger mains supply disconnected.

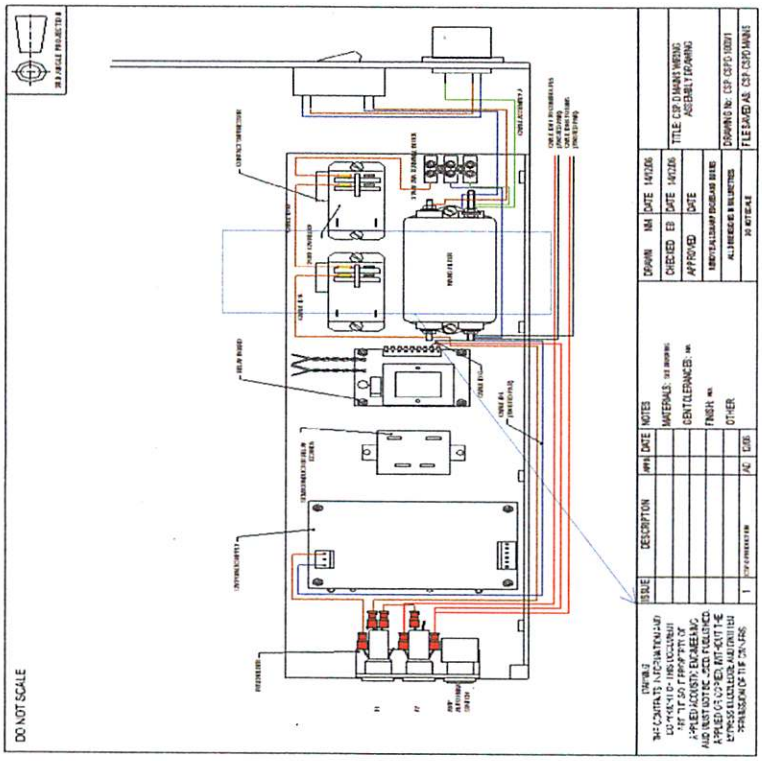

Test 1 CSP-CSPD-700X/C

Using high current ohmmeter check for continuity of no greater than 0.1 Ohms between the earth bolt on the front panel and:-

a)	Ground input pin on Mains Socket	Pass ☒	Fail ☐
b)	Ground connection on each Capacitor	Pass ☒	Fail ☐

Test 2

Preparation

Connect CSP Dummy load or sound source (ensure sound source is deployed) and ensure Lid interlock is in place.

Make sure on the Front Panel that:

- +VE / CLOSURE Key Switch is in the out +VE position.
- Local / remote switch on Local

Test 3

Press HV OFF/RESET:

Fault LED ----------	OFF	Pass ☒	Fail ☐
Timeout LED --------	OFF	Pass ☒	Fail ☐
Interlock LED -------	OFF	Pass ☒	Fail ☐
HV OFF/RESET ----	OFF	Pass ☒	Fail ☐
Local LED ----------	ON	Pass ☒	Fail ☐

Press LOCAL / REMOTE switch should switch off upon activation	Pass ☒	Fail ☐

Test 4

Set power Selector Switch to 100J position
Press HV ON: 100J relay engages — Pass ☒ Fail ☐
Press HV OFF/RESET: 100J relay drops out and HV OFF/RESET
Light comes ON when the switch is pressed. — Pass ☒ Fail ☐

Test 5

Press HV OFF/RESET.
Press HV ON: 100 J relay engages. Turn power selector switch to 200J position: 100J relay drops out and HV OFF/RESET light comes ON — Pass ☒ Fail ☐

Repeat procedure for all power settings checking that the appropriate relays engage.

	Relay				
	A	B	C	D	E
100J	X				
200J		X			
300J	X	X			
400J			X		
500J	X		X		
600J		X	X		
700J	X	X	X		

Pass ☒ Fail ☐

Press HV ON: 100 J relay engages. Turn Hi / LO power selector switch to LO position: 100J relay drops out and HV OFF/RESET light comes ON — Pass ☒ Fail ☐

Press HV ON: 100 J relay engages. Press Emergency Stop switch : 100J relay drops out and all control 12V is isolated. Release switch , 12V is restored and interlock fault reported. — Pass ☒ Fail ☐

Test 6

Set power selection switch to 100 J Position.
Press HV OFF/RESET, press HV ON 100J. Relay engages, wait 20-30 seconds, 100J relay drops out. Fault LED, Timeout LED and HV OFF/RESET light comes ON. — Pass ☒ Fail ☐
SWITCH OFF UNIT

Test 7

Connect 1Hz Key to CSPD
SWITCH ON UNIT.

Front panel MANUAL KEY switch FLASHES — Pass ☒ Fail ☐
Control Board LED 2 Flashes indicating Key Pulse — Pass ☒ Fail ☐
Press HV ON
Control Board LED 1 Lights indicating HV ON — Pass ☒ Fail ☐

U.S. GEOLOGICAL SURVEY
PACIFIC COASTAL AND MARINE SCIENCE CENTER

GEOPHYSICAL SOUND SOURCE SYSTEMS MAINTENANCE RECORD

Applied Acoustics CSPD-1200 Sparker

1.0 Introduction

The USGS Pacific Coastal and Marine Science Center (PCMSC) owns and operates a broad range of geophysical sound sources, seafloor mapping systems, geologic and geotechnical sediment sampling systems, and oceanographic instrument systems. This requires considerable technical and operational support to successfully undertake and complete its field programs. Operational and technical support for these systems is provided by the PCMSC Marine Operations Facility (Marfac) in Santa Cruz, CA. Our Marfac group is staffed by a team of ten ocean engineers, electronics technicians, and marine engineering technicians. They operate, maintain and repair all geophysical and oceanographic systems used to support all of PCMSC's scientific field operations.

The USGS-owned Applied Acoustics CSPD-1200 Sparker sound source was purchased new and delivered in April 2016. The manufacturer guarantees the equipment is within specified operational parameters and fully compliant with Applied Acoustics stated capabilities and specifications.

Jenny White

Jenny White, Marine Operations Manager

8/4/16

Date