**EXHIBIT F**

**PRESURVEY NOTIFICATION FORM**

Applicant/Permittee's Mailing Address:
Jenny White
USGS Pacific Coastal and Marine Geology
400 Natural Bridges Drive
Santa Cruz, CA 95060

Date: 5/6/16
Jurisdiction: Federal __ State X
If State: Permit #PRC 8394
Region: III
Area: Santa Cruz, CA

**GEOPHYSICAL SURVEY PERMIT**

Check one: __X__ New survey ____ Time extension of a previous survey

U.S.G.S. Pacific Coastal and Marine Geology (Applicant/Permittee) will conduct a geophysical survey offshore California in the survey area outlined on the accompanying navigation chart segment. If you foresee potential interference with commercial fishing or other activities, please contact the person(s) listed below:

FEDERAL WATERS (outside 3 nautical miles)

1) Applicant's representative: Jenny White
2) Federal representative: Joan Barminski (BOEM)

NOTE: Any comments regarding potential conflicts in Federal waters must be received by the Applicant's Representative and lead Federal agency within ten (10) days of the receipt of this notice.

STATE WATERS (Inside 3 nautical miles)

1) Permittee's representative: Jenny White
2) CSLC representative: Richard Greenwood

NOTE: Any comments regarding potential conflicts in State waters should be received as soon as possible by the Permittee's representative, no more than fifteen (15) days after the receipt of this notice.

This notice is for at least three surveys of the same area to assess changes in seafloor morphology related to seasonal storms and El Niño Seasonal Oscillations (ENSO), and future anthropogenic influences. The planned survey dates are below, but are subject to change due to weather and scheduling.

November 4-13, 2015 (Completed)
March 14-18, 2016 (Completed)
May 31 – June 3, 2016 (Pending)

1. Expected Date(s) of Operation: May 31 – June 3, 2016 (survey window). This survey is part of an existing survey series scheduled from November 4, 2015 to June 10, 2016, where at least three, two- to three-day surveys will be conducted, as weather and project scheduling permits.
2. Number of Survey Days: 2-3 days
3. Hours of Operation: 7AM to 5PM
4. Survey Purpose/Objective: To assess changes in seafloor morphology related to seasonal storms and El Niño Seasonal Oscillations (ENSO), and future anthropogenic influences

5. Vessel Name: R/V Parke Snavely
6. Vessel Official Number: USGS-2001279
7. Vessel Radio Call Sign: WZ3374
6. Vessel Captain's Name: Peter Dal Ferro
7. Vessel will monitor Radio Channel(s): 13,16
8. Vessel Navigation System: Differential GPS
9. Equipment to be used: SWATH-Plus Interferrometric Echo Sounder
   a. Frequency (Hz, kHz): 234 kHz
   b. Source level: (dB re 1 μPa at 1 meter (m) (rms): 200 dB RMS
   c. Number of beams, across track beam width, and along track beam width:
      1 beam, Phase Differencing Bathymetric Sonar; 360m swath width; 2m along track beam width.
   d. Pulse rate and length: 4.5-13.5 pps at 34-500 μ seconds depending on water depth.
   e. Rise time: 7 μ seconds
   f. Estimated distances to the 190 dB, 180 dB, and 160 dB re 1 uPa (rms) isopleths,
      190 dB: 1M ; 180 dB: 8M ; 160 dB: 50M
      These estimates are based on the underwater sound propagation equation:
      RSPL= SL-20log (R/Ro)-AR, where
      RSPL=received sound potential level
      SL= RMS source level re. 1 uPa (rms) based on manufacturer's specifications
      R= Distance
      Ro= Reference Distance (1 m)
      A= sound absorption coefficient
   g. Deployment depth: 2 m
   h. Tow speed: 8 knots
   i. Approximate length of cable tow: 0 m.

Applicant's Representative:
Jenny White
US Geological Survey
400 Natural Bridges Drive
Santa Cruz, CA 95060
(831) 460-7484

California State Lands Representative:
Richard B. Greenwood
Statewide Geophysical Coordinator
200 Oceangate, 12th Floor
Long Beach, CA 90802-4331
(562) 590-5201

BOEM Representative:
Joan Barminski
Chief, Office of Reservoir & Production
770 Paseo Camarillo
Camarillo, CA 93010
(805) 389-7707

The survey area is bounded by the coordinates:

36° 57.3523 122° 0.8992
36° 56.6733 121° 59.7747
36° 55.6152 122° 0.8152
36° 56.3452 122° 1.870

The track line coordinates are:

| LINE # | SOL | | EOL | |
|---|---|---|---|---|
| | LAT | LON | LAT | LON |
| patch_06 | 36.93727 | -122.01644 | 36.93968 | -122.01095 |
| patch_05 | 36.93971 | -122.01169 | 36.93759 | -122.01652 |
| patch_04 | 36.93791 | -122.01662 | 36.94033 | -122.01118 |
| patch_03 | 36.94036 | -122.01186 | 36.93803 | -122.01718 |
| patch_02 | 36.93863 | -122.01658 | 36.94080 | -122.01172 |
| patch_01 | 36.94098 | -122.01206 | 36.93869 | -122.01734 |
| SQR001 | 36.92908 | -122.01555 | 36.93843 | -122.02934 |
| SQR002 | 36.93850 | -122.02901 | 36.92903 | -122.01506 |
| SQR003 | 36.92977 | -122.01465 | 36.93913 | -122.02847 |
| SQR004 | 36.93906 | -122.02793 | 36.92986 | -122.01431 |
| SQR005 | 36.93056 | -122.01355 | 36.94007 | -122.02759 |
| SQR006 | 36.94014 | -122.02729 | 36.93072 | -122.01326 |
| SQR007 | 36.93156 | -122.01281 | 36.94095 | -122.02658 |
| SQR008 | 36.94096 | -122.02621 | 36.93161 | -122.01240 |
| SQR009 | 36.93238 | -122.01178 | 36.94178 | -122.02567 |
| SQR010 | 36.94204 | -122.02562 | 36.93246 | -122.01148 |
| SQR011 | 36.93311 | -122.01065 | 36.94269 | -122.02493 |
| SQR012 | 36.94248 | -122.02407 | 36.93338 | -122.01059 |
| SQR013 | 36.93424 | -122.01019 | 36.94351 | -122.02390 |
| SQR014 | 36.94363 | -122.02361 | 36.93404 | -122.00936 |
| SQR016 | 36.94449 | -122.02271 | 36.93504 | -122.00877 |
| SQR015 | 36.93498 | -122.00909 | 36.94435 | -122.02297 |
| SQR018 | 36.94542 | -122.02205 | 36.93589 | -122.00791 |
| SQR017 | 36.93574 | -122.00813 | 36.94517 | -122.02210 |
| SQR020 | 36.94617 | -122.02115 | 36.93665 | -122.00713 |
| SQR019 | 36.93654 | -122.00735 | 36.94596 | -122.02125 |
| SQR022 | 36.94675 | -122.02033 | 36.93733 | -122.00638 |
| SQR021 | 36.93762 | -122.00714 | 36.94665 | -122.02050 |
| SQR024 | 36.94751 | -122.01968 | 36.93809 | -122.00567 |
| SQR026 | 36.94758 | -122.01801 | 36.93878 | -122.00488 |
| SQR025 | 36.93863 | -122.00515 | 36.94806 | -122.01905 |
| SQR028 | 36.94905 | -122.01843 | 36.93945 | -122.00424 |
| SQR027 | 36.93933 | -122.00447 | 36.94879 | -122.01848 |
| SQR029 | 36.93970 | -122.00328 | 36.94943 | -122.01765 |
| SQR030 | 36.94963 | -122.01760 | 36.94010 | -122.00350 |
| SQR031 | 36.94061 | -122.00288 | 36.95014 | -122.01691 |
| SQR032 | 36.95015 | -122.01664 | 36.94075 | -122.00281 |

| | | | | |
|---|---|---|---|---|
| SQR034 | 36.95107 | -122.01621 | 36.94143 | -122.00200 |
| SQR035 | 36.94203 | -122.00181 | 36.95133 | -122.01560 |
| SQR036 | 36.95150 | -122.01557 | 36.94201 | -122.00151 |
| SQR037 | 36.94253 | -122.00116 | 36.95216 | -122.01551 |
| SQR038 | 36.95201 | -122.01495 | 36.94258 | -122.00097 |
| SQR039 | 36.94316 | -122.00071 | 36.95249 | -122.01449 |
| SQR040 | 36.95255 | -122.01434 | 36.94305 | -122.00028 |
| SQR041 | 36.94361 | -122.00002 | 36.95301 | -122.01388 |
| SQR042 | 36.95304 | -122.01373 | 36.94368 | -121.99981 |
| SQR043 | 36.94407 | -121.99936 | 36.95354 | -122.01328 |
| SQR044 | 36.95356 | -122.01309 | 36.94428 | -121.99929 |
| SQR045 | 36.93803 | -122.00584 | 36.94740 | -122.01981 |

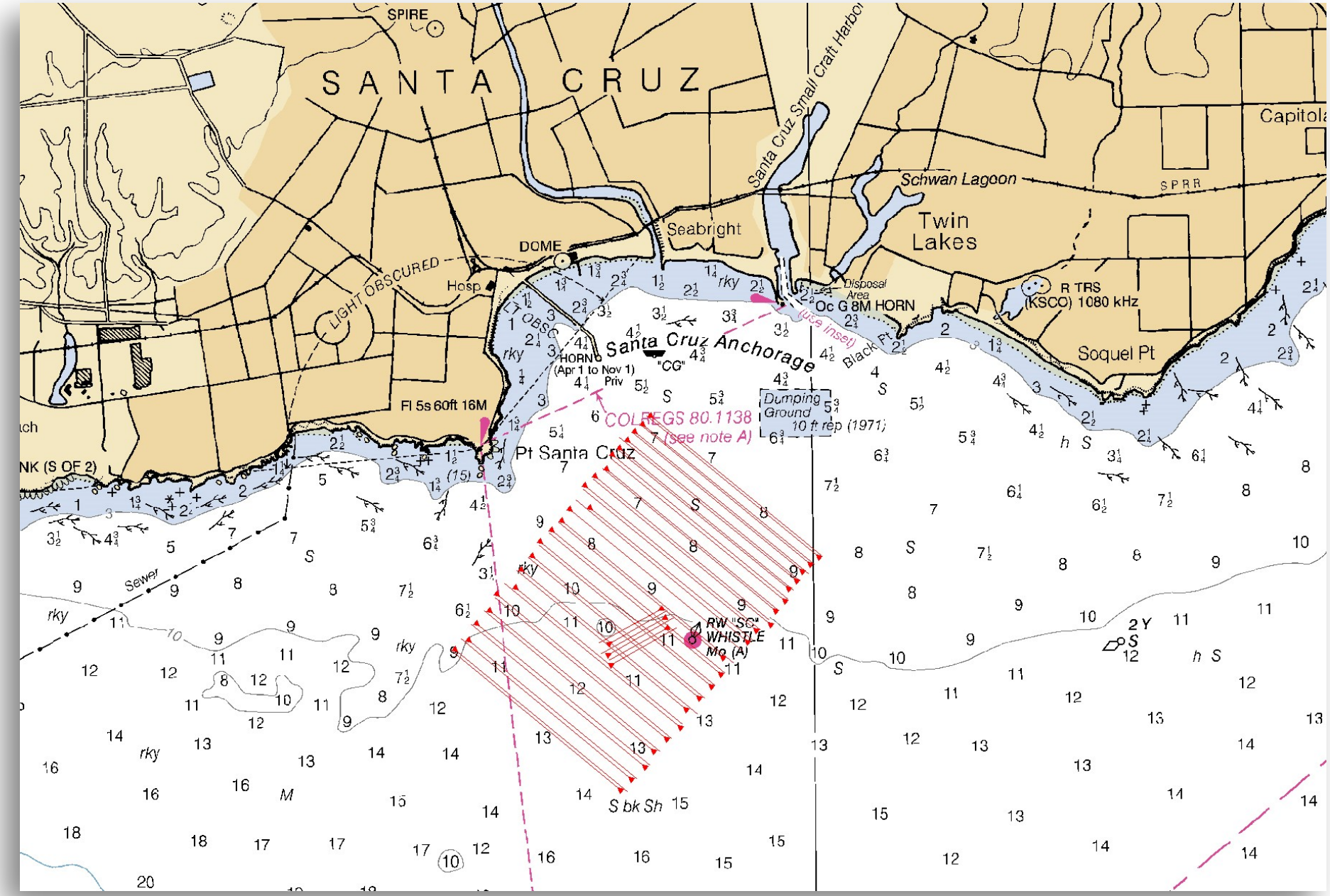
SANTA CRUZ
SPIRE
Santa Cruz Small Craft Harbor
Capitola
Schwan Lagoon
SPRR
Twin Lakes
Seabright
DOME
Hosp
LIGHT OBSCURED
Disposal Area
Oc G 8M HORN
R TRS (KSCO) 1080 kHz
(use inset)
Black Pt
Soquel Pt
Santa Cruz Anchorage
"CG"
HORN (Apr 1 to Nov 1) Priv
Dumping Ground
10 ft rep (1971)
COLREGS 80.1138
(see note A)
Fl 5s 60ft 16M
Pt Santa Cruz
NK (S OF 2)
Sewer
RW "SC" WHISTLE Mo (A)
S bk Sh

**Marine Wildlife Mitigation Plan**
**Santa Cruz Rippled Scour Depression Bathymetric Survey**
**Monterey Bay, CA.**

**(November 5, 2014 - September 30, 2016)**

# 1.0 INTRODUCTION

This marine wildlife mitigation plan is prepared in compliance with the USGS Pacific Coastal and Marine Science Center's existing State Geophysical Permit PRC 8394. This plan is intended to provide guidance to USGS vessel operators and scientific field personnel collecting geophysical data for the Pacific Coastal and Marine Science Center (PCMSC) in Santa Cruz, CA to avoid significant impacts to marine wildlife that may occur during regular geophysical surveys.

## 1.1 Regulatory Basis

Species that are either currently in danger or soon likely to be in danger of extinction throughout all or a portion of its range are protected by the Endangered Species Act of 1973. The United States Fish and Wildlife Service (USFWS), and the National Oceanic and Atmospheric Administration (NOAA) National Marine Fisheries Service (NMFS) implement the Endangered Species Act. During the consultation with NMFS to issue a permit for the offshore geophysical survey, it was determined no incidental take permits are required to use the equipment identified in this document to conduct scientific data acquisition in federal waters offshore of the California coast.

## 1.2 Geophysical Survey Purpose and Objectives

The U.S. Geological Survey, Pacific Coastal and Marine Science Center will conduct a study in northern Monterey Bay mapping changes of large Ripple Scour Depressions (RSD's) over the 2015-2016 winter season. Davis et al. (2013) showed that there are more than 6,000 RSDs along California and that they cover just under 4% of California's State waters, and Hallenbeck et al. (2012) demonstrated that RSDs are important habitats for many important benthic species along California. Despite their widespread extent in California's State waters and their ecological significance, there is little understood about their formation and persistence, and thus how they may be impacted by natural phenomena (storms) and potential future impacts (sea floor cables, trawling, climate change, etc). The study will involve repeat swath mapping surveys (bathymetry and acoustic-backscatter), camera sled tows, sediment sampling, and the deployment of a tripod to understand the natural controls on these features and how they respond to variations in tides, winds, waves, and currents. The repeat surveys are estimated to occur every 8-10 weeks. RSD's are found along the entire coast of California and this study will begin to map how these seafloor features change over time. This research effort and data acquisition has already received authorization through the Monterey Bay National Marine Sanctuary under permit **MBNMS-2014-029-A1.**

Hallenbeck, T.R., Kvitek, R., Lindholm, J., 2012. Rippled scour depressions add ecologically

significant heterogeneity to soft sediment habitats on the continental shelf. *Marine Ecology Progress Series*, v. 468, p. 119–133.

Davis, A., Muller, C., Kvitek, R., Storlazzi, C.D., and Phillips, E., 2013. Distribution and abundance of rippled scour depressions along the California coast. *Continental Shelf Research*, v. 69, p. 88-100.

PCMSC will contact the NOAA Long Beach Office staff and local whale-watching operations to acquire information on the current composition and relative abundance of marine wildlife offshore as well as any pinniped haul out sites. Whale activity is moderate to high at the moment. The peak whale season is February - May in the Monterey Bay. At the center of northernmost survey line, the survey area will be no closer than 400 meters of a known pinniped haul out site at Point Santa Cruz. Additionally, one day prior to survey activities, the NOAA Long Beach office, local whale watching operations will be contacted to get an update on marine wildlife sightings in the area. This information will be conveyed to the captain and crew prior to the survey.

A review of environmental responsibility of project operations will be conducted by the chief scientist in charge of the survey operations prior to commencing the first day of operations. When new personnel will be in the crew, this training will be repeated at least for those new to the crew. They will be made aware of their individual responsibility and will be shown how to be aware of possible environmental impacts and how to mitigate them during the geophysical survey operations. Information relating to seasonality, as an indication of the types of animals that might be in our survey area, at the time of survey work will also be presented to the crew. A copy of this document will be provided to the crew of our survey vessel.

All personnel will be expected to be consistently aware that they are to be alert to any presence of marine wildlife while they are performing their duties. There are a number of signs/indications of marine wildlife presence and each crew member will be responsible to maintain vigilance for those signs within the constraints of their project duties. Some of those indications are:

a. Sounds - such as splashing, vocalizations (by animals and birds), and blowing (breathing).

b. Visual indications - birds aggregating, changes in water character such as areas of rippled water, white water caused by splashing, changes in color or shape of the ocean surface,

## 1.3 Survey Schedule and Layout

The survey is scheduled to commence field activities on November 5, 2015 and is expected to take no more than 5 days but additional days have been scheduled to account for weather delays. The survey will be conducted aboard the R/V Parke Snavely out of Santa Cruz harbor and will cover an area of approximately 2 square kilometers off of Santa Cruz, CA.

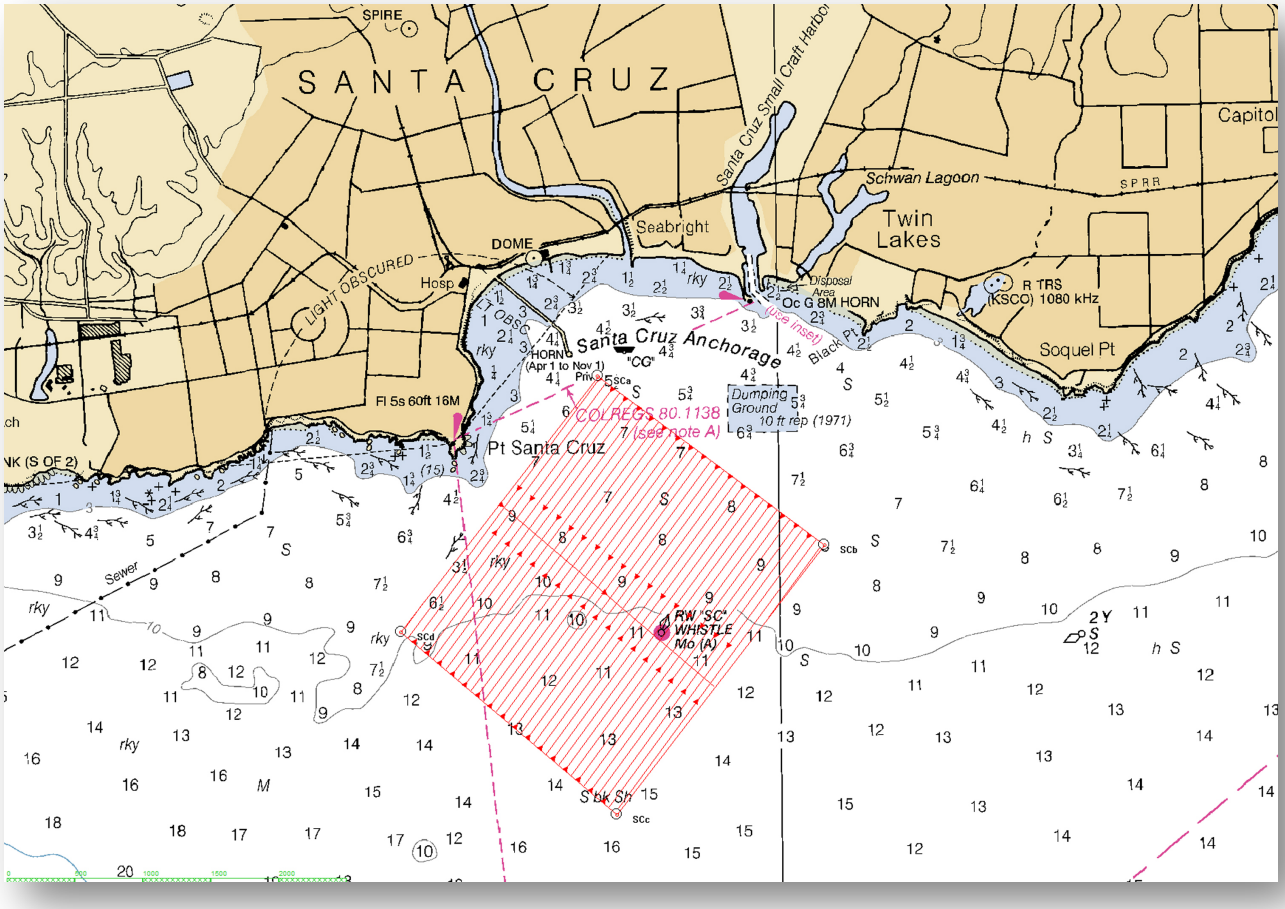


**Figure 1. Regional Map of Survey Area**

## 2.0 Survey Equipment and Activities

The survey vessel will be the R/V Parke Snavely, a 36 foot long, aluminum-hulled catamaran owned and operated by USGS PCMSC. Only daylight data collection will be conducted with the vessel returning to Santa Cruz harbor daily.

PCMG proposes to use the following equipment to collect the required data:

- SEA Swath Plus Phase Differencing Bathymetric Sonar Echo Sounder

The proposed survey will require the use of a marine vessel and in-water equipment that generate noise during data acquisition. The results of modeling of the noise generated by the survey equipment is shown in Table 1. Those results indicate that the area within which the 160 dB re: 1µPa rms sound level (the level specified by NOAA as potentially harmful to sensitive marine mammals) can be observed by monitors onboard the survey vessel.

**Table 1. Distances to Received Pressure Levels from Equipment Sound Source**

| Sounder System | Frequency (kHz) | Source Level (dB peak) | Source Level (dB rms) | Distance to SL160 dBrms (meters) | Distance to SL 180 dB (rms) (meters) | Distance toSL190 dB (rms) (meters) |
|---|---|---|---|---|---|---|
| SEA Swath Plus Echo Sounder | 234.5 kHz | 216 | 200 | 50 | 9 | 3 |

These estimates are based on the underwater sound propagation equation:

RSPL= SL-20log (R/Ro)-AR where,
RSPL=Recieved sound potential level
SL= RMS source level re. 1 uPa (rms) based on manufacturer's specifications
R= Distance
Ro= Reference Distance (1 m)
A= sound absorption coefficient

The greatest distance from the sound source to the 160 dB level (50 m) for the proposed equipment) is considered the "safety zone" for this equipment. However, because the operating frequency of 234.5 kHz is above the cutoff hearing threshold for marine mammals, CSLC has determined that the observance of the "safety zones" is not a requirement for this survey (personal communication, K. Keen, CSLC).

# 3.0 Marine Wildlife

## 3.1 Marine Wildlife

The following discusses the marine wildlife that have been recorded within the project region, those taxa that are most likely to be within the project region during the geophysical survey, and methods that will be instituted by the vessel operator to reduce or eliminate potential impacts to marine wildlife during transit and survey operations.

Table 2 provides information on the seasonal variations in the marine wildlife that are expected to be or have been reported within the Project area.

## Table 2: Abundance Estimates for Marine Mammals and Reptiles of California Unless Otherwise Indicated

| **Common Name**<br>***Scientific Name*** | **Population Estimate** | **Current Population Trend** |
|---|---|---|
| **REPTILES** | | |
| **Cryptodira** | | |
| Olive Ridley turtle<br>*Lepidochelys olivacea* | 1.39 million<br>(Eastern Tropical Pacific)** | Increasing |
| Green turtle<br>*Chelonia mydas* | 3,319-3,479**<br>(Eastern Pacific Stock) | Increasing |
| Loggerhead turtle<br>*Caretta caretta* | 1,000<br>(California)** | Decreasing |
| Leatherback turtle<br>*Dermochelys coriacea* | 178<br>(California)** | Decreasing |
| **MAMMALS** | | |
| **Mysticeti** | | |
| California gray whale<br>*Eschrichtius robustus* | 18,017 (Eastern North Pacific Stock) | Fluctuating annually |
| Fin whale *Balaenoptera physalus* | 2,624<br>(California/Oregon/Washington Stock) | Increasing off California |
| Humpback whale<br>*Megaptera novaeangliae* | 1,878<br>(California/Oregon/Washington Stock) | Increasing |
| Blue whale<br>*Balaenoptera musculus* | 2,046 (Eastern North Pacific Stock) | Unable to determine |
| Minke whale *Balaenoptera acutorostrata* | 202<br>(California/Oregon/Washington Stock) | No long-term trends suggested |
| Northern right whale<br>*Eubalaena japonica* | 17 (based on photo-identification)<br>(Eastern North Pacific Stock) | No long-term trends suggested |
| Sei whale<br>*Balaenoptera borealls* | 83 (Eastern North Pacific Stock) | No long-term trends suggested |
| **Odontoceti** | | |
| Short-beaked common dolphin<br>*Delphinus delphis* | 343,990<br>(California/Oregon/Washington Stock) | Unable to determine |
| Long-beaked common dolphin<br>*Delphinus capensls* | 17,127<br>(California Stock) | Unable to determine |
| Dall's porpoise<br>*Phocoenoides dalli* | 32,106<br>(California/Oregon/Washington Stock) | Unable to determine |
| Harbor porpoise<br>*Phocoena phocoena* | 1,478 (Morro Bay Stock) | Increasing |
| Pacific white-sided dolphin<br>*Lagenorhynchus obllquldens* | 21,406<br>(California/Oregon/Washington Stock) | No long-term trends suggested |
| Risso's dolphin<br>*Grampus griseus* | 4,913<br>(California/Oregon/Washington Stock) | No long-term trends suggested |
| Short-finned pilot whale<br>*Globicephala macrorhynchus* | 465<br>(California/Oregon/Washington Stock) | No long-term trends suggested |
| Bottlenose dolphin<br>*Turslops truncates* | 684<br>(California/Oregon/Washington Offshore Stock) | No long-term trends suggested |
| | 290 (California Coastal Stock) | No long-term trends suggested |
| Northern right whale dolphin<br>*Llssopelphis borealis* | 6,019<br>(California/Oregon/Washington Stock) | No long-term trends suggested |
| Sperm whale<br>*Physeter macrocephalus* | 751<br>(California/Oregon/Washington Stock) | No long-term trends suggested |
| Killer whale Orcinus orca | 85<br>(Eastern North Pacific Southern Resident Stock) | Decreasing |
| | 162<br>(Eastern North Pacific Offshore Stock) | No long-term trends suggested |
| **Pinnipedia** | | |
| California sea lion<br>*Zalophus californianus* | 141,842<br>(U.S. Stock) | Unable to determine; increasing in most recent three year period |

| | | |
|---|---|---|
| Northern fur seal<br>*Callorhinus ursinus* | 5,395 (San Miguel Island Stock) | Increasing |
| Guadalupe fur seal<br>*Arctocephalus townsendi* | 3,028 (Mexico Stock) Undetermined in California | Increasing |
| Northern (Steller) sea lion<br>*Eumetopias jubatus* | 2,479 California Stock | Decreasing |
| Northern elephant seal<br>*Mirounga angustirostris* | 74,913 | Increasing |
| Pacific harbor seal<br>*Phoca vitulina richardsi* | 31,600 | Stable |
| Fissipedia | | |
| Southern sea otter<br>*Enhydra lutris nereis* | 2,711* | Unable to determine |

*Estimates provided by National Marine Fisheries Service* (NOAA Fisheries 2011) *

Estimate provided by USGS (2010)

** Estimates provided by National Marine Fisheries Service (NMFS) (2004), Marquez, et al. (2002), Eguchi et ai. (2007), Benson et al. (2007), and NMFS (2007). Estimates are based on number of current numbers of nesting females.

During the transit periods, there is a potential for encountering marine wildlife. Table 3 lists those species that are likely to occur in the survey area

# Table 3. Marine Wildlife Species and Most Likely Periods of Occurrence within the Survey Area

| Family<br>Common Name | Month of Occurrence [1] | | | | | | | | | | | |
|---|---|---|---|---|---|---|---|---|---|---|---|---|
| | J | F | M | A | M | J | J | A | S | O | N | D |
| **REPTILES** | | | | | | | | | | | | |
| **Cyptodira** | | | | | | | | | | | | |
| Olive Ridley turtle *(T)* [2] | | | | | | | | | | | | |
| Green turtle (T)[1],[2] | | | | | | | | | | | | |
| Loggerhead turtle (T) [2] | | | | | | | | | | | | |
| Leatherback turtle (E) [2] | | | | | | | | | | | | |
| **MAMMALS** | | | | | | | | | | | | |
| **Mysticeti** | | | | | | | | | | | | |
| California gray whale | | | | | | | | | | | | |
| Blue whale (E) | | | | | | | | | | | | |
| Fin whale (E) | | | | | | | | | | | | |
| Humpback whale (E) | | | | | | | | | | | | |
| Minke whale | | | | | | | | | | | | |
| Sei whale (E) | | | | | | | | | | | | |
| Northern right whale (E) | | | | | | | | | | | | |
| **Odontoceti** | | | | | | | | | | | | |
| Short-beaked common dolphin | | | | | | | | | | | | |
| Dall's porpoise | | | | | | | | | | | | |
| Harbor porpoise | | | | | | | | | | | | |
| Long-beaked common dolphin | | | | | | | | | | | | |
| Pacific white-sided dolphin | | | | | | | | | | | | |
| Risso's dolphin | | | | | | | | | | | | |
| Sperm whale | | | | | | | | | | | | |
| Short-finned pilot whale | | | | | | | | | | | | |
| Bottlenose dolphin | | | | | | | | | | | | |
| Northern right whale dolphin | | | | | | | | | | | | |
| Killer whale | | | | | | | | | | | | |
| **Pinnipedia** | | | | | | | | | | | | |
| Northern fur seal [3] | | | | | | | | | | | | |
| California sea lion | | | | | | | | | | | | |
| Northern elephant seal [4] | | | | | | | | | | | | |
| Pacific harbor seal | | | | | | | | | | | | |
| Guadalupe fur seal (T) | | | | | | | | | | | | |
| Steller sea lion | | | | | | | | | | | | |
| **Fissipedia** | | | | | | | | | | | | |
| Southern sea otter (T) [5] | | | | | | | | | | | | |
| Relatively uniform distribution | | Not expected to occur | | | | | Most likely to occur due to seasonal distribution | | | | | |

(E) Federally listed endangered species.
(T) Federally listed threatened species.
(1) Not Used
(2) Rarely encountered, but may be present year-round. Greatest abundance during July through September.
(3) Only a small percent occur over continental shelf (except near San Miguel rookery, May-November).
(4) Common near land during winter breeding season and spring molting season.
(5) Only nearshore (diving limit 100 feet).
Sources: Bonnell and Dailey (1993), NOAA Fisheries (2011), NCCOS (2007)

# 4.0 ONBOARD MITIGATIONS

## 4.1 Fishing Gear Clearance

In addition to submitting the required Notice to Mariners that will advise commercial fishers of pending on-water activities, prior to the start of each survey day the vessel will traverse the proposed survey corridor for that day to note and record the presence of deployed fishing gear. No survey lines within 30 m (100 ft) of the observed fishing gear will be completed. The survey crew will not remove or relocate any fishing gear; removal or relocation will only be accomplished by the owner or by an authorized CDFG agent.

## 4.2 Marine Wildlife Monitoring

NOAA does not require exclusion/safety zones to be monitored. Additionally, only one Marine Wildlife Observer (MWO) observer is required for surveys when the only geophysical equipment being used is operated above 200 kHz (above the known functional hearing range of marine mammals). However, the vessel captain, who is a certified Marine Wildlife Observer, or a member of the crew will provide a summary report about marine mammal sightings/encounters (species, number, time, lat/long, behavior, activity of survey vessel, etc.). Our observations are automated; when there is a sighting, the systems operator (attending electronics engineer) makes an observation entry by hitting a function key on the navigation computer and fills in the observation data in the text field. This text file contains the species, number, time, behavior, ships position and vessel activity and is used to generate a GIS map of observations by event number for the post survey report.

## 4.3 Mitigations During Transit and Survey

The research vessel will transit during day-light hours from Santa Cruz harbor. During transits there is a potential for encountering marine wildlife. Onboard monitoring will be conducted by the vessel master, a certified MWO, and science crew. During transits the vessel will maintain a minimum distance of 100 m (1,640 ft.) from observed animals. If the vessel master observes a marine mammal within the path of the transiting vessel, they will immediately slow the vessel and/or change course in order to avoid contact.

Cetaceans (whales) vary in their swimming patterns and duration of dives and therefore all shipboard personnel will be watchful as the vessel crosses the path of a whale or anytime whales are observed in the area.

If whales are observed during transits, the vessel master will institute the following measures:

- Maintain a minimum distance of 100 m from sighted whales;
- Do not cross directly in front of or across the path of sighted whales;
- When transit directions is parallel to whale path, maintain constant speed that is not

greater than the whales speed, or alter transit direction away from whale path;

- Do not position the vessel in such a manner to separate female whales from their calves;
- If a whale engages in evasive or defensive action, slow the vessel and move away from the animal until the animal calms or moves out of the area.

During survey operations, the vessel will maintain survey a speed of 5-8 knots and will maintain a heading that coincides with survey track lines. If marine wildlife is observed within the vicinity of the vessel, the vessel master will take precautions to avoid collision, ending and restarting the track line survey if necessary.

If a collision with marine wildlife occurs, the vessel master will document the conditions under which the accident occurred, including the following:

- Location of the vessel when the collision occurred (latitude and longitude);
- Date and time;
- Speed and heading of the vessel;
- Observed conditions (e.g., wind speed and direction, swell height, visibility in miles or kilometers, and presence of rain or fog);
- Species of marine wildlife contacted; and
- Organization, vessel ID and name of master in charge of the vessel at time of accident.

In accordance with NOAA requirements, after a collision, the vessel should stop, if safe to do so. The vessel may proceed after confirming that it will not further damage the animal by doing so. The vessel will then communicate by radio or telephone all details to the vessel's base of operations. The PCMG Marine Operations Superintendent will contact the Stranding Coordinator, NMFS, Southwest Region, Long Beach, to obtain instructions. Alternatively, the vessel captain may contact the NMFS Stranding Coordinator directly using the marine operator to place the call or directly from an onboard telephone, if available to:

**NOAA Southwest Regional Stranding Coordinator**
**National Marine Fisheries Service**
**501 West Ocean Blvd, Suite 4200**
**Long Beach, CA 90802-4213**
**562-980-4017**
**Contact: Sarah Wilkin**
**Email: sarah.wilkin@noaa.gov**

It is unlikely that the vessel will be asked to stand by until NOAA or CDFG personnel arrive, however this will be determined by the Stranding Coordinator. According to the MMPA, the vessel operator is not allowed to aid injured marine wildlife or recover the carcass unless requested to do so by the NOAA Stranding Coordinator.

Although NOAA has primary responsibility for marine mammals in both state and federal waters, the CDFG will also be advised that an incident has occurred in state waters affecting a protected species. Reports should be communicated to the federal and state agencies listed below:

| **Federal** | **State** | **State** |
|---|---|---|
| Sarah Wilkin, Stranding Coordinator<br>Southwest Region<br>National Marine Fisheries Service<br>Long Beach, California<br>(562)980-4017 | Enforcement Dispatch Desk<br>California Department of Fish and Game<br>Long Beach, California<br>(562)590-5132 | California State Lands Commission<br>Mineral Resources Management Division<br>Long Beach, California<br>(562) 590-5071 |

## 4.4 Operational Measures

Operational measures to reduce impacts to marine mammals or turtles will include: 1) soft-start technique, 2) marine wildlife monitoring, 3) slow vessel speeds, 4) avoidance of pinniped haul out sites, and 4) limitations on equipment usage.

*a) Soft Start*

The soft-start technique will involve initiating the echo sounder at the lowest practical sound level, increasing the output in such a manner as to increase in steps not exceeding approximately 6 decibels per 5-minute period.

*b) Wildlife Monitoring*

Marine wildlife monitoring will be conducted by onboard personnel. Due to the small size of the vessel, there is limited space for observers. Several of our technicians and both captains are PSO certified to ensure adequate observations. The designated observer for this survey will be Pete Dartnell and the captains will assist with sighting and identifying marine wildlife.

Because the survey echo sounder operated above 200 kHz, no safety zone is required. The only pinniped haul out site in this area is located >400 m from the survey boundary. However, USGS will take the following precautionary measures:

- Not approach within 300 m of the haul-out site (consistent with NMFS guidelines);
- Expedite survey activity in this area in order to minimize the potential for disturbance of pinnipeds on land;
- Pinniped haul out site location is given in Table 4.

- The vessel will continuously monitor the daily survey area to ascertain the presence, species and location of any marine wildlife is apparent in the intended survey area. The vessel master and onboard personnel will be watchful whales or marine mammals are observed in the area. The vessel operator shall observe the following guidelines:

- Make every effort to maintain distance from sighted marine mammals and other marine wildlife;
- Do not cross directly in front of (perpendicular to) migrating whales or any other marine mammal or turtle;
- When paralleling marine mammals or turtles, the vessel will operate at a constant speed that is not faster than that of the animals;
- Care will be taken to ensure female whales are not separated from their calves; and, if a whale engages in evasive or defensive action, the vessel will reduce speed or stop until the animal calms or moves out of the area.

*c) Vessel Speed*

Survey speeds for the SWATHplus sonar data acquisition will be approximately 4 to 7 knots for maximum data accuracy and data quality.

*d) Limitations on equipment usage*

Limitations on the frequency, pulse length, and pulse rate will be implemented to reduce potential harmful noises. The shortest possible pulse length and lowest pulse rate (pings per second) will be used, dependent on water depth.

**Table 4 Pinniped Haul Out Locations**

| LOCATION | SPECIES | LATITUDE | LONGITUDE |
|---|---|---|---|
| Point Santa Cruz, Santa Cruz, CA | California Sea Lion | 36.95 | -122.03 |

## 4.5 Monitoring Reporting

A Post Survey Field Operations and Compliance Report will be submitted to CSLC staff as soon as possible but no more than 30 days after the completion of survey activities.

## APPENDIX A: MARINE WILDLIFE OBSERVER CERTIFICATIONS

Since 2006, the USGS Pacific Coastal and Marine Science Center (PCMSC) has provided trained marine mammal observers in support of low power geophysical surveys in California State Waters and Federal Waters under NOAA National Marine Fisheries (NMFS) jurisdictions. These surveys have been conducted under permit authorizations from California State Lands Commission (CSLC) (Permit# PRC 8394) and various NMFS Incidental Harassment Authorizations (IHAs) and Letters of Concurrence. PCMSC has provided training for 17 of their staff research scientists and science and technical support staff as marine wildlife observers (MWO) to support our science programs geophysical surveys and meet our marine mammal mitigation obligations under pursuant to our CSLC and NMFS permit requirements.

The MWO training for our science and technical support staff is provided by Dr. James Harvey, a Professor of Marine Science at MLML and the Interim Director of MLML, and has taught courses on the biology and ecology of marine turtles, birds, and mammals for 22 years. Jim has advised more than 70 graduate students as they obtained their M.S. degree, and has all of the instructional material (handouts, identification manuals, slides, video, etc.) for teaching this workshop.

The training was conducted during a 2 day workshop at Moss Landing Marine Laboratories on the identification of marine mammal species, including handouts, slides, and video. All species of marine mammals in the area of planned USGS activities were discussed, their status and trends, and identifying features that allow species identification, and possibly differentiation between sexes and age classes. The workshop participants were instructed in the "normal" behaviors of marine mammals using visual explanations, slides, and video. A typical data sheet will be prepared and participants instructed how they would complete the data form. The rationale for the need for trained observers and importance of the data was emphasized. This training concluded with an observational cruise aboard an MLML vessel on Monterey Bay to observe the marine mammals discussed in the course in their natural setting and receive identification tips and other information in a field setting similar to that which they would expect during science operations.

**PCMG Certified Marine Mammal Observers**

| Observer Name | Staff Position |
|---|---|
| Ginger Barth | Research Scientist |
| Jonathan Childs | Research Scientist |
| Guy Cochrane | Research Scientist |
| Jamie Conrad | Research Scientist |
| Theresa Fregoso | Science Support |
| Steven Hartwell | Science Support |
| Patrick Hart | Research Scientist |
| Sam Johnson | Research Scientist |
| Tom Lorenson | Science Support |
| Tom Parsons | Research Scientist |
| Carol Reiss | Science Support |

| **Observer Name** | **Staff Position** |
|---|---|
| Ray Sliter | Science Support |
| Mike Torresan | Science Support |
| Peter Triezenberg | Science Support |
| Steve Watt | Research Scientist |
| Pete Dal Ferro | Science Support - Vessel Master |
| Jenny White | Science Support - Vessel Master |

# RPS Offshore Protected Species Observer Training

This is to verify that

# Peter Dartnell

Has successfully completed a course of instruction in
Training for Seismic Mitigation
Under BOEM NTL 2012-G02

This certificate of Completion awarded

This 11th day of April 2014

RPS

411 N Sam Houston Pkwy, Suite 400
Houston, Texas 77060
Telephone (281) 448-6188 Fax (281) 448-6189
www.rpsgroup.com

BOEM Approved Instructor

# U.S. GEOLOGICAL SURVEY
# PACIFIC COASTAL AND MARINE GEOLOGY SCIENCE CENTER

# MANAGEMENT OF ACCIDENTAL DISCHARGE AND VESSEL INCIDENTS DURING OFFSHORE GEOPHYSICAL SURVEYS

## 1.0 INTRODUCTION

The survey operations will be conducted aboard the USGS Research Vessel Parke Snavely, a 36 foot aluminum catamaran powered by twin Volvo Penta diesel engines. Because of the vessel's relatively small size, it is anticipated that response to any operational spills will be quickly identified and response will be initiated quickly and efficiently by the vessel master and on board designated vessel crew. At the initiation of each project or project phase, a spill management review will be conducted by the vessel master who is in all cases the responsible authority. Oil spills in United States (U.S.) marine waters shall be reported immediately.

## 2.0 OPERATIONAL SPILLS

Operational spills might involve one or more of the following substances carried on board the vessel: (i) fuel; (ii) lube oil; (iii) hydraulic oil; or (iv) waste oil. The vessel is equipped with a Buffalo Quick-Response Oil Spill Kit, which includes socks for fast spill containment (three 4" socks), woven polypropylene sheets (15 sheets) for rapid absorption of surface oil and protective gear, protective gloves (1 pair), disposal bag (1), and a set of instructions. This oil spill kit is located in the forward cabin of the vessel. This spill kit is rated to clean up 5 gallons of liquid. All of the liquids (listed below) that could cause a hazardous spill are either in the fuel tank or are located in the aft deck engine maintenance compartment of the vessel. Thus, if a spill occurred, these would be contained in the engine or maintenance compartments or, or if a grounding or instance occurred that punctured the gas tank, this would leak into the water, which is beyond the scope of our cleanup efforts. In the event a spill occurred in the engine compartment, the oil spill kit would be used to contain the hazardous liquids and the bilge would not be emptied until it could be pumped out at a hazardous waste facility. We do not anticipate a spill of greater than 5 gallons.

(i) Fuel:

A spill kit shall be available for use in the event of a spill. If the fuel is spilled on the deck, it shall be immediately removed, bagged and disposed of at an appropriate hazardous waste reception facility. In the event of spillage in the water, the vessel master shall notify the Coast Guard and port facility.

(ii) Lube oil:

A spill kit shall be available for use in the event of a spill. If the oil is spilled on deck or in the machinery space, it shall be immediately removed, bagged and disposed of at an appropriate hazardous waste reception facility. In the event of spillage in the water, the vessel master shall notify the Coast Guard and port facility.

(iii) Hydraulic oil:

A spill kit shall be available for use in the event of a spill. If the oil is spilled on deck or in the machinery space, it shall be immediately removed, bagged and disposed of at an appropriate hazardous waste reception facility. In the event of spillage in the water, the vessel master shall notify the Coast Guard and port facility.

(iv) Pipe leakage:

The vessel master shall check the piping and rubber hose daily for leakage. Where leakage is found, it shall be repaired immediately, in the event of leakage, the vessel deck engineer shall secure valve(s) at the appropriate tank before repairing the leak. Spilled fuel on the vessel shall be immediately removed, bagged and disposed of at an appropriate hazardous waste reception facility. In the event of spillage in the water, the vessel master shall notify the Coast Guard and port facility.

## 3.0 EMPLOYEE TRAINING ON OIL SPILL CONTINGENCY PLAN

Prior to the launching of the vessel for any activities, all captain and crew members on the vessel will have read the Oil Spill Contingency Plan, understand procedures to be implemented in the event of an oil spill, and know where the oil spill kit is located on the vessel.

## 4.0 VESSEL FUELING

All vessel fueling will be conducted at an approved docking facility. No cross vessel fueling will be performed. Appropriate spill avoidance measures during filling procedures will be observed.

## 5.0 PRIORITY ACTIONS TO ENSURE PERSONNEL AND VESSEL SAFETY

Safety of vessel personnel and the vessel are paramount. In the event that a crewman's injuries require outside emergency assistance, the PCMSC safety officer shall be contacted immediately and emergency personnel contacted. While awaiting emergency assistance, the on board vessel master or qualified vessel crew personnel will render first aid and/or CPR. The nearest emergency medical facilities for this area is:

Dominican Hospital Emergency Department
1555 Soquel Dr, Santa Cruz, CA 95065
(831) 462-7710

## 6.0 MITIGATING ACTIVITIES

If safety of both the vessel and the personnel has been addressed, the vessel master shall care for the following issues:

- Assessment of the situation and monitoring of all activities as documented evidence.
- Care for further protection of the personnel, use of protective gear, assessment of further risk to health and safety.
- Containment of the spilled material by absorption and safe disposal within leak proof containers of all used material onboard until proper delivery ashore, with due consideration to possible fire risk.
- Decontamination of personnel after finishing the cleanup process.

All personnel shall refer to the MSDS's on board for additional information.

## 7.0 EMERGENCY CONTACTS FOR STATE AND FEDERAL AGENCIES

Emergency numbers for U.S.C.G. for the San Francisco and Central Coast Areas are:

Pacific SAR Coordinator - Alameda: 510-437-3700

Rescue Coordination Center, Alameda: 510-437-3700

Any oil spill in U.S. marine waters shall be reported immediately to the following state and agencies:

| | |
|---|---|
| West Coast Oil Spill hot-line | 800-OELS-911, *or* |
| Department of Fish and Game CalTIP | 888-CFG-CALTip |
| (Californians Turn In Poachers & Polluters) | (888-334-2258). *and* |
| U.S. Coast Guard National Response Center | 800-424-8802 |
| California Office of Emergency Services (OES) | 800-OILS-911 or 800-852-7550. |

During the phone call, the following information will be given over the phone.

a. Name and telephone number of caller.
b. Spill location
c. What was spilled (oil, gas, diesel, etc.)
d. Estimated size of spill
e. The date & time spill was identified (same day).
f. Any oiled or threatened wildlife
g. Source of spill, if known
h. Activity observed at the spill site

After taking the necessary actions, the spill will be reported in writing to the Governor's Office of Emergency Services on their forms.

Additionally, California Department of Fish and Game certified wildlife rescue/response organizations will be contacted about the spill. In the Southern California area, these include the following contacts:

Oiled Wildlife Care Network
1-877-UCD-OWCN

Animal Advocates
323-651-1336

California Wildlife Center
310-458-9453

South Bay Wildlife Rehab
310-378-9921

# U.S. GEOLOGICAL SURVEY
# PACIFIC COASTAL AND MARINE GEOLOGY SCIENCE CENTER

# GEOPHYSICAL SOUND SOURCE SYSTEMS MAINTENANCE RECORD

## SWATH Plus 234.5 kHz Interferometric Mapping Echo Sounder

## 1.0 Introduction

The USGS Pacific Coastal and Marine Science Center (PCMSC) owns and operates a broad range of geophysical sound sources, seafloor mapping systems, geologic and geotechnical sediment sampling systems, and oceanographic instrument systems. Considerable technical and operational support is required to successfully undertake and complete its field programs. Operational and technical support for these systems is provided by the PCMSC Marine Operations Facility (Marfac) in Santa Cruz, CA. The Marfac team is comprised of ten ocean engineers, electronics technicians, and marine engineering technicians. They operate, maintain and repair all geophysical and oceanographic systems used to support PCMSC's scientific field operations.

The SWATHplus 234 mapping sonar is owned and operated by the USGS PCMSC. This system has been thoroughly checked, tested and calibrated according to the manufacturer's (SEA Ltd.) recommended procedures. This system is comprised of the transducer interface unit (TIU) SN 10011 which itself houses three transducer electronics module (TEMs) SN 2115, 2116 and 2107; and the three actual sonar transducers on a mount with fixed deck-leaders. The results of this evaluation confirm the SWATHplus 234 system to be operating at SEA's stated specifications in all regards.

System checkout includes physical inspection of all components, cables, connectors and electronics for any signs of corrosion, wear or damage, all necessary cleaning and full functionality checks. Complete disassembly, cleaning, and re-assembly of the TEMs is followed by precise calibration and check of all Phase Offsets. Transducer capacitance and insulation tests are performed to ensure proper operation and identify any possible signs of transmitter or receiver degradation.

These procedures were followed by a full at-sea check of all system parameters in order to confirm system performance meets specs. The Swath Plus 234 is fully compliant with SEA stated capabilities and specifications.

George Tate for Robert Wyland, Senior Electronics Technician — 10/15/15 Date

George Tate for Jenny White, Marine Operations Superintendent — 10/15/15 Date

**SYSTEM CHECKOUT LIST** **Date: 10/15/2015**

**Inspecting Technician:** Robert Wyland

| Operational Elements | Condition Flag | Comments |
|---|---|---|
| **Physical condition, inside and out** | *OK* | *Good condition* |
| **Condition of connectors** | *OK* | *Good condition* |
| **Clean dust from fans** | *OK* | *Completed* |
| **Clean all connectors to ensure good contact** | *OK* | *All contacts clean* |
| **Check supply voltages** | *OK* | *Complete* |
| **Inspect cables and wires (wear on insulation, signs of damage, etc.)** | *OK* | *All cables in good repair* |
| **Remove the TEMs and take off the top of the cans** | *OK* | *Completed* |
| **Inspect the age and version, and comment on state and any issues with the hardware (e.g. known problems with later versions of TEM boards)** | *OK* | *Latest version Rev. 8.2 confirmed* |
| **Actual phase offsets after calibration recorded** | *OK* | *Phases recorded* |
| **Check cable runs, avoiding sources of wear and electrical interference.** | *OK* | *Completed* |
| **Screw-lock to hold nuts, screws, etc. in place** | *OK* | *Completed* |
| **Check transducers and cables for signs of wear and damage and possible water ingress** | *OK* | *Transducers dry and clean, no excessive wear* |
| | *OK* | |
| **Biological growth on transducer faces** | *OK* | *Transducer faces clean* |
| **Check connectors for signs of wear, damage and corrosion. Clean the pins if necessary.** | *OK* | *Completed* |
| **Check electrical connections using capacitance and "Megger" insulation tests from the transducer connectors** | *OK* | *Completed* |
| **Replace any sacrificial anodes, connector and housing seals, etc.** | *OK* | *Completed* |

**Phase Offset Measurements**

| TEMS | | Phase Offsets | | | | | | Firmware |
|---|---|---|---|---|---|---|---|---|
| **Side** | **Serial Number** | **Element** | *** Degrees** | **Element** | *** Degrees** | **Element** | *** Degrees** | **Ver.** |
| **Port** | **2115** | **AB** | *-1* | **AC** | *-1* | **AD** | *0* | *Rev. 8.2* |
| **Stbd** | **2107** | **AB** | *0* | **AC** | *-2* | **AD** | *0* | *Rev. 8.2* |
| **Forwd** | **2116** | **AB** | *0* | **AC** | *0* | **AD** | *0* | *Rev. 8.2* |

**Nominal phase offset values are balanced across port and starboard; acceptable values are within 5 degrees.*

**Phase Offset Measurements**

| | Port Transducer | | | | Stbd Transducer | | | | Forward Transducer | | | |
|---|---|---|---|---|---|---|---|---|---|---|---|---|
| **Stave** | **Pins** | **Nominal nf** | **Measured nf** | ***Within Spec.** | **Pins** | **Nominal nf** | **Measured nf** | ***Within Spec.** | **Pins** | **Nominal nf** | **Measured nf** | ***Within Spec.** |
| | **D-E** | **7.1** | *6.9* | *X* | **D-E** | **6.9** | *6.61* | *X* | **D-E** | **6.48** | *6.25* | *X* |
| | **C-D** | **4.48** | *4.14* | *X* | **C-D** | **4.4** | *4.08* | *X* | **C-D** | **3.12** | *2.91* | *X* |
| **TX** | **C-E** | **4.53** | *4.35* | *X* | **C-E** | **4.39** | *4.19* | *X* | **C-E** | **1.78** | *1.95* | *X* |
| | **A-B** | **7.2** | *6.89* | *X* | **A-B** | **7.7** | *7.34* | *X* | **A-B** | **6.41** | *6.36* | *X* |
| | **R-A** | **4.47** | *4.23* | *X* | **R-A** | **4.48** | *4.26* | *X* | **R-A** | **5.11** | *5.21* | *X* |
| **A** | **R-B** | **4.54** | *4.24* | *X* | **R-B** | **4.52** | *4.33* | *X* | **R-B** | **5.0** | *5.07* | *X* |
| | **P-N** | **7.4** | *6.94* | *X* | **P-N** | **7.0** | *7.05* | *X* | **P-N** | **6.71** | *6.53* | *X* |
| | **M-P** | **4.54** | *4.20* | *X* | **M-P** | **4.44** | *4.21* | *X* | **M-P** | **5.35** | *5.3* | *X* |
| **B** | **M-N** | **4.53** | *4.24* | *X* | **M-N** | **4.5** | *4.20* | *X* | **M-N** | **5.3** | *5.21* | *X* |
| | **L-K** | **7.7** | *7.27* | *X* | **L-K** | **7.6** | *7.53* | *X* | **L-K** | **3.1** | *2.97* | *X* |
| | **J-K** | **4.49** | *4.19* | *X* | **J-K** | **4.67** | *4.28* | *X* | **J-K** | **7.1** | *6.50* | *X* |
| **C** | **J-L** | **4.53** | *4.17* | *X* | **J-L** | **4.56** | *4.95* | *X* | **J-L** | **6.86** | *6.61* | *X* |
| | **H-G** | **7.5** | *7.26* | *X* | **H-G** | **7.6** | *8.55* | *X* | **H-G** | **3.15** | *3.01* | *X* |
| | **F-H** | **4.48** | *4.16* | *X* | **F-H** | **4.5** | *4.18* | *X* | **F-H** | **5.18** | *5.11* | *X* |
| **D** | **F-G** | **4.48** | *4.19* | *X* | **F-G** | **4.48** | *4.17* | *X* | **F-G** | **5.17** | *5.02* | *X* |

**Nominal capacitance values are balanced across all transducer staves; acceptable values are within 20 percent of adjacent staves.*

**MM-AIR-1: Engine Tuning, Engine Certification, and Fuels**

The following information is provided as required for compliance with Mitigation Measure *(MM) AIR-1: Engine Tuning, Engine Certification, and Engine Fuels*. The USGS Research Vessel Parke Snavely is a 36ft., 2007 catamaran work boat. The vessel was built for USGS by Armstrong Marine in Port Angeles, WA and was delivered with two Volvo Penta D6-310 HP diesel engines. These engines comply with IMO NOx limits and the comprehensive emission requirements (EU RCD and US EPA Tier 2, rating 5 Marine Leisure and rating 4 Marine Commercial).

Regarding the NOx emissions, MM AIR-1 states that daily NOx emissions should not exceed 100 pounds based on engine certification emission factors. This can be accomplished with Tier 2 engines if daily fuel use is 585 gallons or less. This vessel only holds 150 gallons and has an efficiency of about 2 miles per gallon. Thus, on our survey, we expect to cover approximately 10-15 miles total, for an estimated maximum fuel consumption of 30 gallons.

The manufacturer's specifications for these engines is provided below.

# Life- and Rescue Boat Propulsion Engines

# D4/D6 SOLAS

132–272 kW (180–370 hp) crankshaft power acc. to ISO 8665

## New powerful D4/D6 SOLAS range

Volvo Penta has now introduced a new powerful SOLAS approved range for use in fast rescue boats, lifeboats and tender boats: the D4-180, D4-225, D4-260, D6-280, D6-310, D6-330, and D6-370 common rail marine diesel engines with rating 4 and 5 power settings. The engines are SOLAS approved for both inboard, waterjet and sterndrive propulsion.

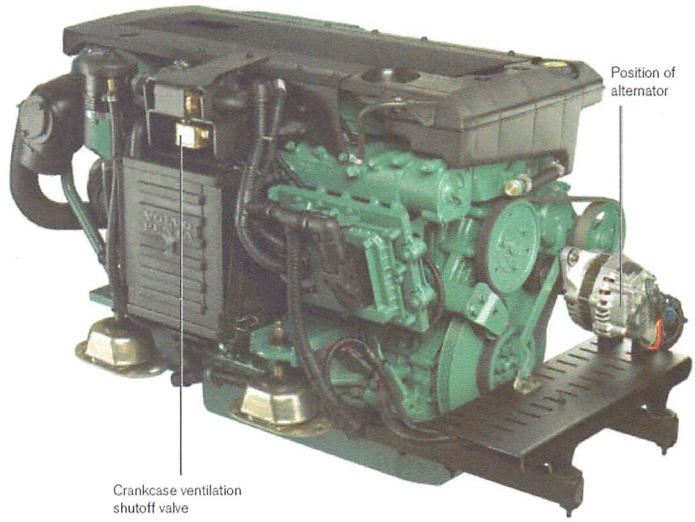


### Designed to withstand the tough Life- and Rescue boat environment

The D4/D6 Life- and Rescue boat engines are designed to comply with the requirements in the following regulations and standards:

- Council Directive 96/98/EC, as amended by Commission Directive 2002/75/EC
- SOLAS 74 Convention, as amended, Reg. III/4 and Reg. III/34
- LSA Code
- IMO Resolution MSC. 48(66)
- IMO Res. MSC. 81(70), Part 1, paras. 6.10.2 to 6.10.6 and 6.14.6 to 6.14.8.
- U.S.C.G.

### SOLAS specifications

The SOLAS regulations specify the following demands for the engine:

- Withstand free fall of the lifeboat from 3 meters
- Withstand a lateral impact of 3.5 m/s of the lifeboat
- Stop automatically on capsizing and easily restart
- Fuel and lubricating systems shall prevent the loss of fuel and oil during capsizing
- Work submerged in water to the crankshaft centerline
- Work for not less than 5 min. after starting cold with the lifeboat out of the water
- Run properly at an angle of up to 10° trim and an angle of up to 20° list, either way
- Manual starting system or power starting system with two independent sources
- The lifeboat engine shall be designed to limit electromagnetic emissions
- The engine to be started without heater down to –15°C (–30°C with heater)

### Standard high performance engines

All SOLAS engines are based on standard engine designs with SOLAS kits mounted and are tested in factory before delivery to boat builders. The major changes are a new position of the existing alternator and a new crankcase ventilation shutoff valve.

The design will extend the engine by approx. 270 mm in fore end to accommodate the new position of the alternator. The void space can be used to accommodate the batteries, as usual. See the drawing on page 2 for more information regarding dimensions of the SOLAS kit for D4/D6.

The SOLAS kit also includes a tilt switch, to be mounted on the engine bulkhead.

The base engine mounts are originally designed for high G-forces. Thus, there is no need for extra reinforcement for fast rescue boats and lifeboat applications to meet the SOLAS demands.

### EVC for full control in all situations

All engines are equipped with EVC-C, the latest development in engine control and instrumentation for Volvo Penta marine engines, for easy installation and easy handling.

### A propulsion package fully matched, tested and supported by one company

The engines and the drives are developed and produced by Volvo Penta, and the service of the engines will be well taken care of by more than 5,000 Volvo Penta commercial and leisure dealers around the world.

### Meeting new emission standards

The common rail injection system in combination with electronics and an advanced combustion system are setting new standards in minimizing noxious emissions and particulates. The engines comply with IMO NOx limits and the comprehensive emission requirements EU RCD and US EPA Tier 2 rating 5 Marine Leisure, rating 4 Marine Commercial).

### Certificate

The engines will be delivered with a certificate and marked with a wheelmark in accordance with the MED/SOLAS regulations.

VOLVO PENTA

7746549 - Downloaded from www.volvopenta.com 4/22/2008 3:21:17 AM

# D4/D6 SOLAS

## Technical description

For full technical information and performance data for the D4 and D6 engines, please see the product bulletins and technical data sheets for the selected power setting and model of D4 and D6 engine family.

## Technical Data

Crankshaft power + dry weight BT inboard

D4-180:
@ 2800 rpm, kW (hp) .....132 (180)
kg (lb)..... 482 (1063)

D4-225:
@ 3500, kW (hp) .....165 (225)
kg (lb)..... 482 (1063)

D4-260:
@ 3500 rpm, kW (hp) .....191 (260)
kg (lb)..... 482 (1063)

D6-280:
@ 3500 rpm, kW (hp) .....206 (280)
kg (lb)..... 580 (1279)

D6-310:
@ 3500 rpm, kW (hp) .....228 (310)
kg (lb)..... 580 (1279)

D6-330:
@ 3500 rpm, kW (hp) .....243 (330)
kg (lb)..... 580 (1279)

D6-370:
@ 3500 rpm, kW (hp) .....272 (370)
kg (lb)..... 580 (1279)

## Battery

Minimum requirements for cold start:
- 12V, 1150 CCA for D4 engines
- 12V , 2300 CCA for D6 engines

## Cold starting device

2 kW engine coolant heater to be installed for coldstarts below -15°C (down to -30°C)

## Reverse gear

- Reverse gear with matched drop center and 8° down angle for compact installation and minimum propeller shaft angle.
- Bevel gears which results in smooth running at all speeds
- Hydraulically operated clutch for smooth shifting
- Electrical shifting performed by electro-magnetic valves
- Seawater-cooled oilcooler

## Waterjet

- For selection of waterjet please contact your waterjet dealer.

## Sterndrive DPH/DPR

- Complete with transom shield, and installation components
- Max tilt angle 50° (adjustable)
- Protective zinc anodes to prevent corrosion
- Built-in kick-up function to reduce possible damage, in the event the drive strikes an underwater object
- Electrical shifting performed by electronic actuator
- Power Trim with one-button operation in twin installation
- Fully integrated water inlet and exhaust system
- Fully hydraulic power-assisted steering system
- Isolated propellers to prevent corrosion

Contact your local Volvo Penta dealer for further information.

Not all models, standard equipment and accessories are available in all countries. All specifications are subject to change without notice.

The engine illustrated may not be entirely identical to production standard engines.

## Dimensions

Dimensions shown are additional dimensions for SOLAS kit on D4 and D6. Not for installation.
For more dimensions, please refer to the respective product bulletin and installation drawing.

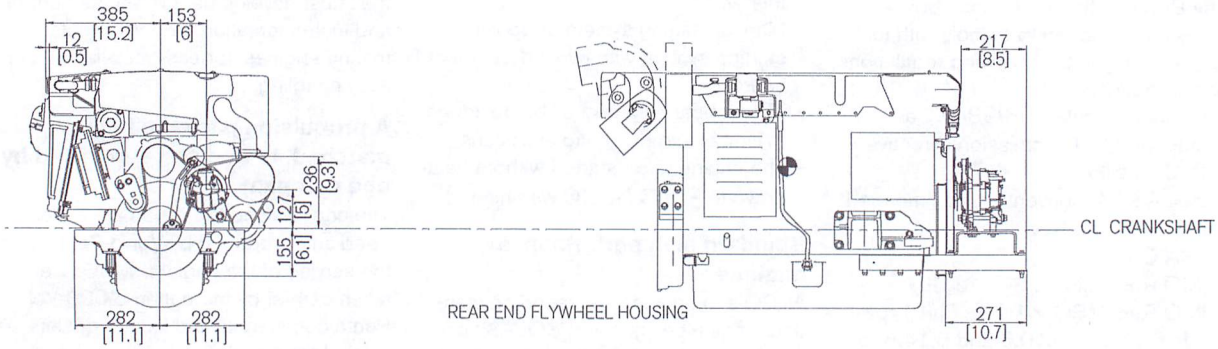


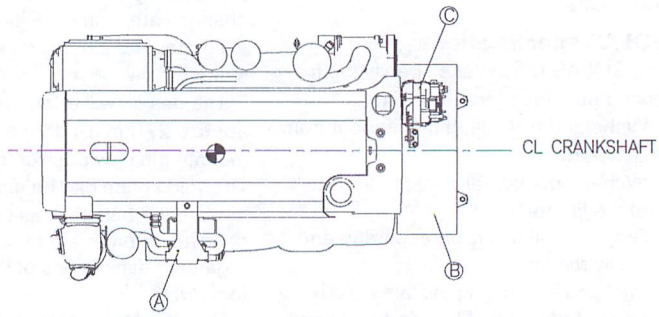


Ⓐ CRANKCASE VENTILATION

Ⓑ UNIVERSAL BRACKET

Ⓒ NEW PLACEMENT FOR ALTERNATOR


**AB Volvo Penta**
SE-405 08 Göteborg, Sweden
www.volvopenta.com



10-2007. © 2007 AB Volvo Penta.

7748549 - Downloaded from www.volvopenta.com 4/22/2008 3:21:17 AM

## Keen, Kelly@SLC

**From:** White, Jennifer <jennifer_white@usgs.gov>
**Sent:** Friday, May 06, 2016 3:01 PM
**To:** D11LNM@uscg.mil; SLCOGPP@SLC
**Cc:** Keen, Kelly@SLC; Greenwood, Richard@SLC
**Subject:** Pre-Survey Notice of Geophysical Operations on Monterey Bay - Geophysical Coordinator and Notice to Mariners
**Attachments:** CSLC EXHIBIT F - SCruz RSD Survey - 7 (June 2016).docx

**PRE SURVEY NOTIFICATION FOR GEOPHYSICAL SURVEY**

The USGS Pacific Coastal and Marine Science Center (PCMSC) will be conducting a geophysical survey of a ~2 km square area off of Santa Cruz, CA under California State Lands Permit #8394. Operations will include a high resolution swath bathymetric survey using a pole mounted SEA SwathPlus echo sounder on the USGS research vessel Parke Snavely, a 36-foot aluminum catamaran. The survey will be conducted from May 31 - June 3, 2016.

In keeping with our California State Lands Permit requirements, we are providing you with the attached Geophysical Pre-Survey Notice for your information.

--
Jenny White
Marine Operations Manager
Pacific Coastal and Marine Science Center
U.S. Geological Survey
(831) 818-8915 cell
(831) 460-7485 work

## Keen, Kelly@SLC

**From:** White, Jennifer <jennifer_white@usgs.gov>
**Sent:** Friday, May 06, 2016 3:00 PM
**To:** cizenstark@santacruzharbor.org; razzeca@mosslandingharbor.dst.ca.us; mcintyre@mosslandingharbor.dst.ca.us; scheibla@ci.monterey.ca.us
**Cc:** Keen, Kelly@SLC; Greenwood, Richard@SLC
**Subject:** Pre-Survey Notice of Geophysical Operations on Monterey Bay - Harbormasters
**Attachments:** CSLC EXHIBIT F - SCruz RSD Survey - 7 (June 2016).docx

**PRE SURVEY NOTIFICATION FOR GEOPHYSICAL SURVEY**

The USGS Pacific Coastal and Marine Science Center (PCMSC) will be conducting a geophysical survey of a ~2 km square area off of Santa Cruz, CA under California State Lands Permit #8394. Operations will include a high resolution swath bathymetric survey using a pole mounted SEA SwathPlus echo sounder on the USGS research vessel Parke Snavely, a 36-foot aluminum catamaran. The survey will be conducted from May 31 - June 3, 2016.

In keeping with our California State Lands Permit requirements, we are providing you with the attached Geophysical Pre-Survey Notice for your information.

--
Jenny White
Marine Operations Manager
Pacific Coastal and Marine Science Center
U.S. Geological Survey
(831) 818-8915 cell
(831) 460-7485 work

## Keen, Kelly@SLC

**From:** White, Jennifer <jennifer_white@usgs.gov>
**Sent:** Friday, May 06, 2016 3:01 PM
**To:** tascuba@live.com; info@montereybaydiving.com; infomb@sevenseasscuba.com; dive@silverprincecharters.com; dive@aquarius2.com; David Todd; Jim Fields; info@aquariusdivers.com; info@asudoit.com
**Cc:** Keen, Kelly@SLC; Greenwood, Richard@SLC
**Subject:** Pre-Survey Notice of Geophysical Operations on Monterey Bay - Dive Shops
**Attachments:** CSLC EXHIBIT F - SCruz RSD Survey - 7 (June 2016).docx

**PRE SURVEY NOTIFICATION FOR GEOPHYSICAL SURVEY**

The USGS Pacific Coastal and Marine Science Center (PCMSC) will be conducting a geophysical survey of a ~2 km square area off of Santa Cruz, CA under California State Lands Permit #8394. Operations will include a high resolution swath bathymetric survey using a pole mounted SEA SwathPlus echo sounder on the USGS research vessel Parke Snavely, a 36-foot aluminum catamaran. The survey will be conducted from May 31 - June 3, 2016.

In keeping with our California State Lands Permit requirements, we are providing you with the attached Geophysical Pre-Survey Notice for your information.

--
Jenny White
Marine Operations Manager
Pacific Coastal and Marine Science Center
U.S. Geological Survey
(831) 818-8915 cell
(831) 460-7485 work