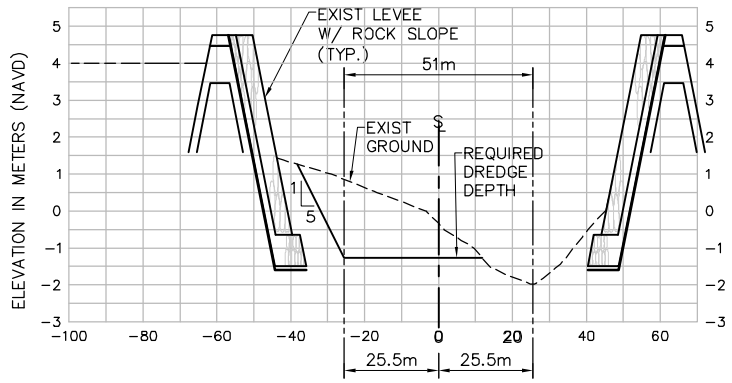

2+50

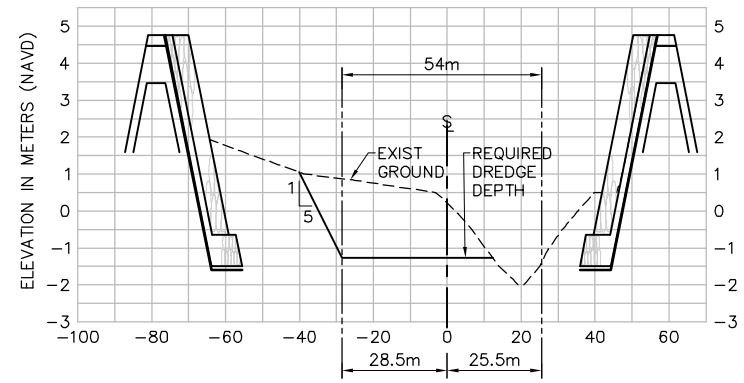

2+75

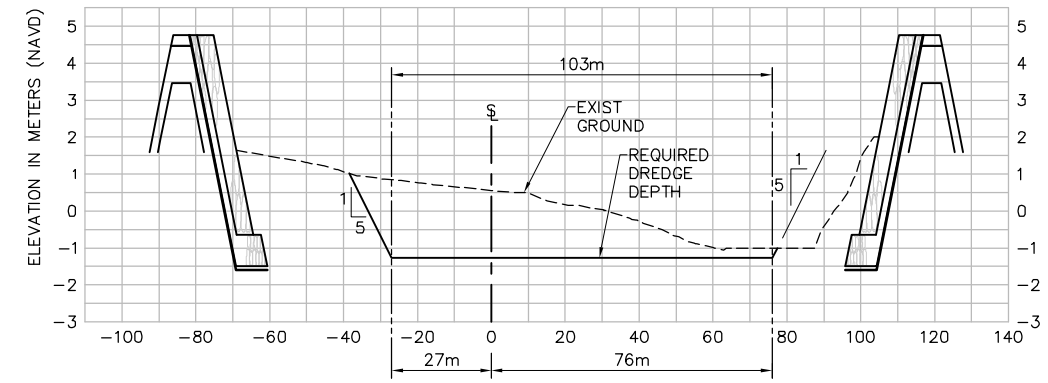

3+00

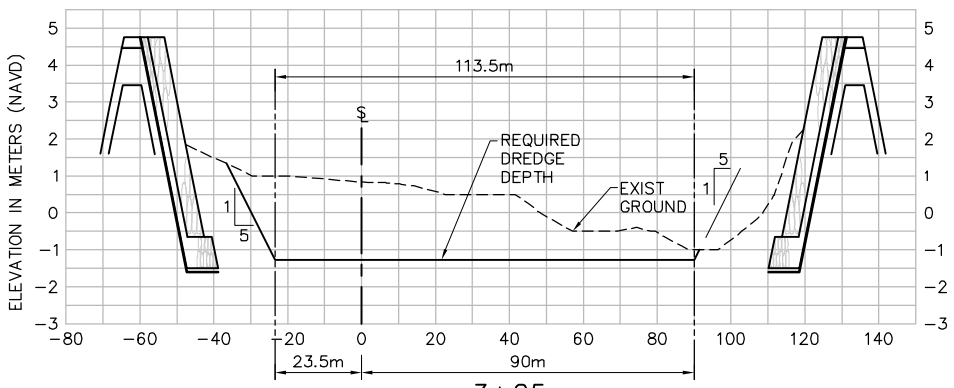

3+25

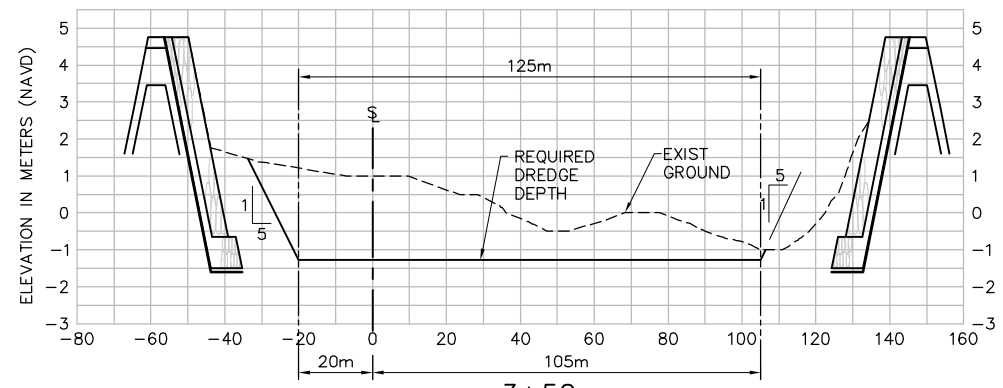

3+50

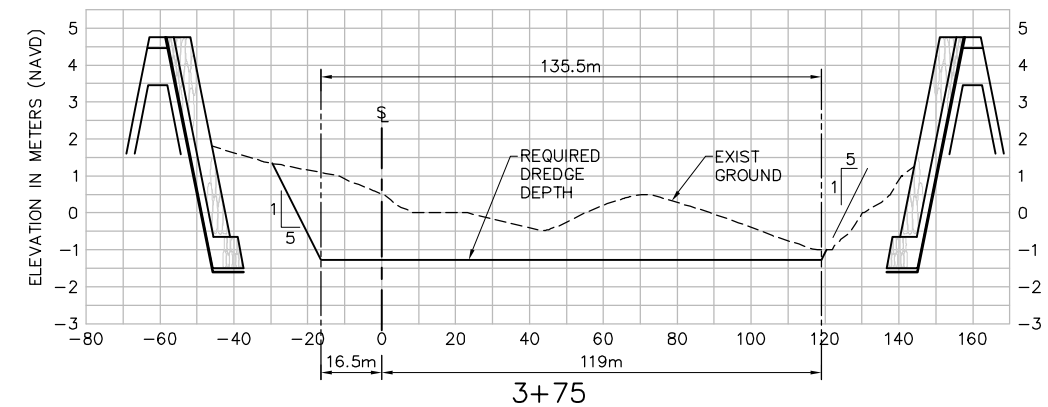

3+75

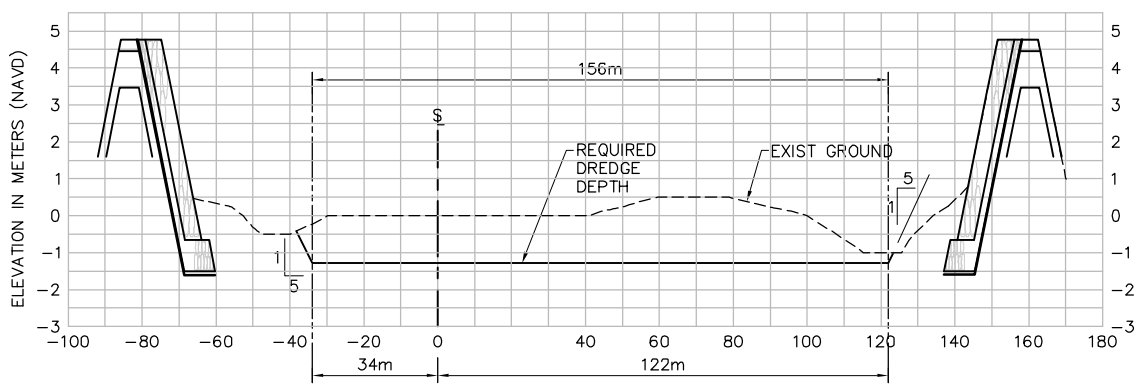

4+00

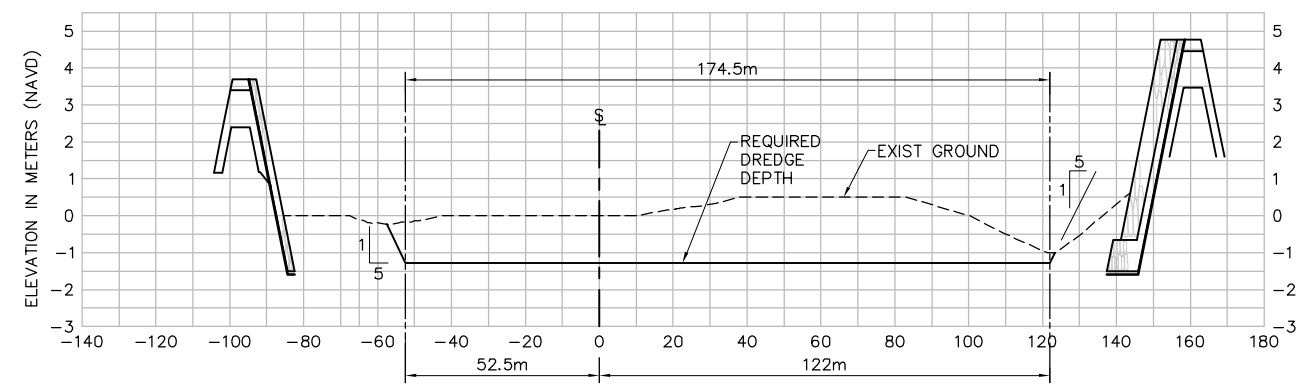

4+25

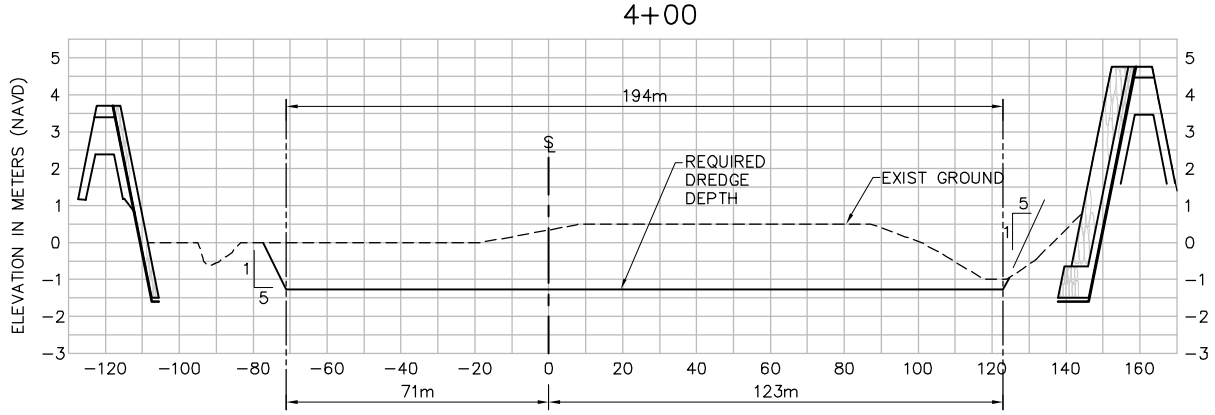

4+50

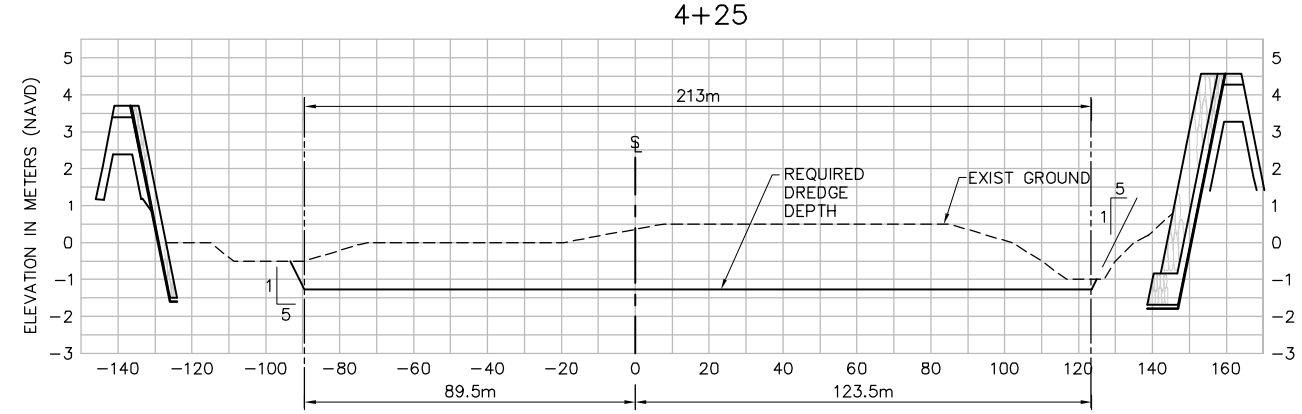

4+75

XS-1

LEGEND:

- ℄ DREDGE STATION LINE
- REQUIRED DREDGING DEPTH = −1.2m
- EXISTING GROUND (SURVEY JANUARY, 2008)
- LIMITS OF DREDGING (AT TOE OF SLOPE)

NOTE:

SIDE SLOPES ARE APPROX. 1:5 (V:H). 1

HORIZONTAL SCALE: 1:1000

VERTICAL SCALE: 1:100

REGISTERED PROFESSIONAL ENGINEER RUSSELL H. BOUDREAU No. C041810 EXP. 3/31/10 CIVIL STATE OF CALIFORNIA

MOFFATT & NICHOL
3780 KILROY AIRPORT WAY, SUITE 600
LONG BEACH, CALIFORNIA, 90806
562-426-9551

REV.	DATE	DESCRIPTION	BY
1	6-23-08	EDIT NOTE	

BOLSA CHICA WETLANDS, CA

BOLSA CHICA LOWLANDS RESTORATION PROJECT
TYPICAL DREDGING SECTIONS

DESIGNED	DRAWN	CHECKED	DATE	DRAWING NO.
CF	CvR	RS	6-23-08	

P:\6170 - Bolsa Monitoring\CADD\Revised Bid Plans_062508\617000XS001-XS004.dwg; Jun. 25, 08 -11:22 AM; SLOOP, ROB (C) MOFATT AND NICHOL.