ATTACHMENT 2

GOODE
CORE ANALYSIS SERVICE
1400 Easton Drive, Suite 111 • Bakersfield, CA 93309 • (661) 322-5540 • Fax (661) 322-5576

June 28, 2001

Mr. Mike Wracher
VENOCO, Inc.
217 State Street
Santa Barbara, CA 93101

Subject: Crude Analysis Data
Well: Various
File No. 101189

Dear Mr. Wracher:

Samples were submitted to our laboratory for viscosity, API gravity, and pyro-chromatography analysis. The results of these measurements are presented in the accompanying report along with tabular data.

Viscosity was measured on extracted oil by a cone and plate viscometer. API was determined by pycnometer. Tabular data of these viscosity measurements are included in the report.

Pyro-Chromatography samples were loaded in a low dead volume container and vaporized at 300° centigrade. The evolved gasses were passed directly onto a chromatographic column. The separated components were detected by a flame ionization detector and recorded. Indices calculated from the integrated data are presented along with copies of chromatograms from the sample.

The sample of produced oil from well 3120-14 was weathered by mixing with sea water supplied from Carpenteria sampled 6/01/01. A sample was removed after 2,7,and 14 days of mixing. They were analyzed by Pyro-Chromatography for comparison to the seep oil collected. Components from the seep appear to be similar to the sample after 14 days of mixing. Normal Alkanes heavier than n-C12 are dominant in both. The highest peak is n-C20 in both samples. Bio degradation and water washing is likely involved in the alteration process.

We are pleased to have performed this service and hope we will be called upon again in the future.

Very Truly Yours,

GOODE CORE ANALYSIS SERVICE

Bryan A. Bell

Distribution: 4 copies data: Addressee

GOODE CORE ANALYSIS SERVICE

Company: Veneco Inc.
Well: Various
Field: Offshore
Job No: 101189

Date: 3/13/00

CRUDE OIL ANALYSIS

SAMPLE I.D.	VISC.(cp) 122F	VISC.(cp) 200F	API	EXTRACTED WEIGHT(gm)
SEEP	>150000			
421-2	<9		35.7	
3120-14	128		16.6	

Viscosity measured by a Cone and Plate Viscometer
Gravity measured by pycnometer

GOODE CORE ANALYSIS SERVICE

Company: Veneco Inc.
Well: Various
Field: Holly
County,St: State Offshore

File No.: 101189
Date: 6/27/2001
Sample Type: Various

PYRO-CHROMATOGRAPHY TABULAR DATA

Smpl #	Sample ID	17+18/ Pr+Phy	IP15/ n-C14	Pr/Phy	CPI	% <n-C13	% >n-C18	% n-C/ Total	Total Area
1	421-2 Prod	1.29	0.50	1.63	1.45	37.5	34.7	21.8	3.4
2	3120-14 Prod	1.16	0.69	0.92	0.98	28.8	49.8	18.0	1.8
3	Seep Oil	1.05	0.75	0.81	1.13	2.3	85.1	15.4	3.3
4	421-2 Soil Sam	1.00	0.95	0.85	1.00	7.7	71.5	13.5	4.0
5	421-1 Soil Sam	1.00	0.92	0.93	0.99	8.0	70.5	11.1	3.4
6	After 2 Days	0.98	0.71	0.92	0.98	2.6	74.0	15.6	2.4
7	After 7 Days	1.10	0.78	0.84	1.09	0.2	83.9	17.7	1.2
8	After 14 Days	1.06	0.97	0.58	1.01	0.8	94.0	16.1	0.2

Company: Veneco Inc.
Well: Various
Field: Holly

File No.: 101189
Date: 6/27/2001
Sample Type: Various

PYRO-CHROMATOGRAPHY

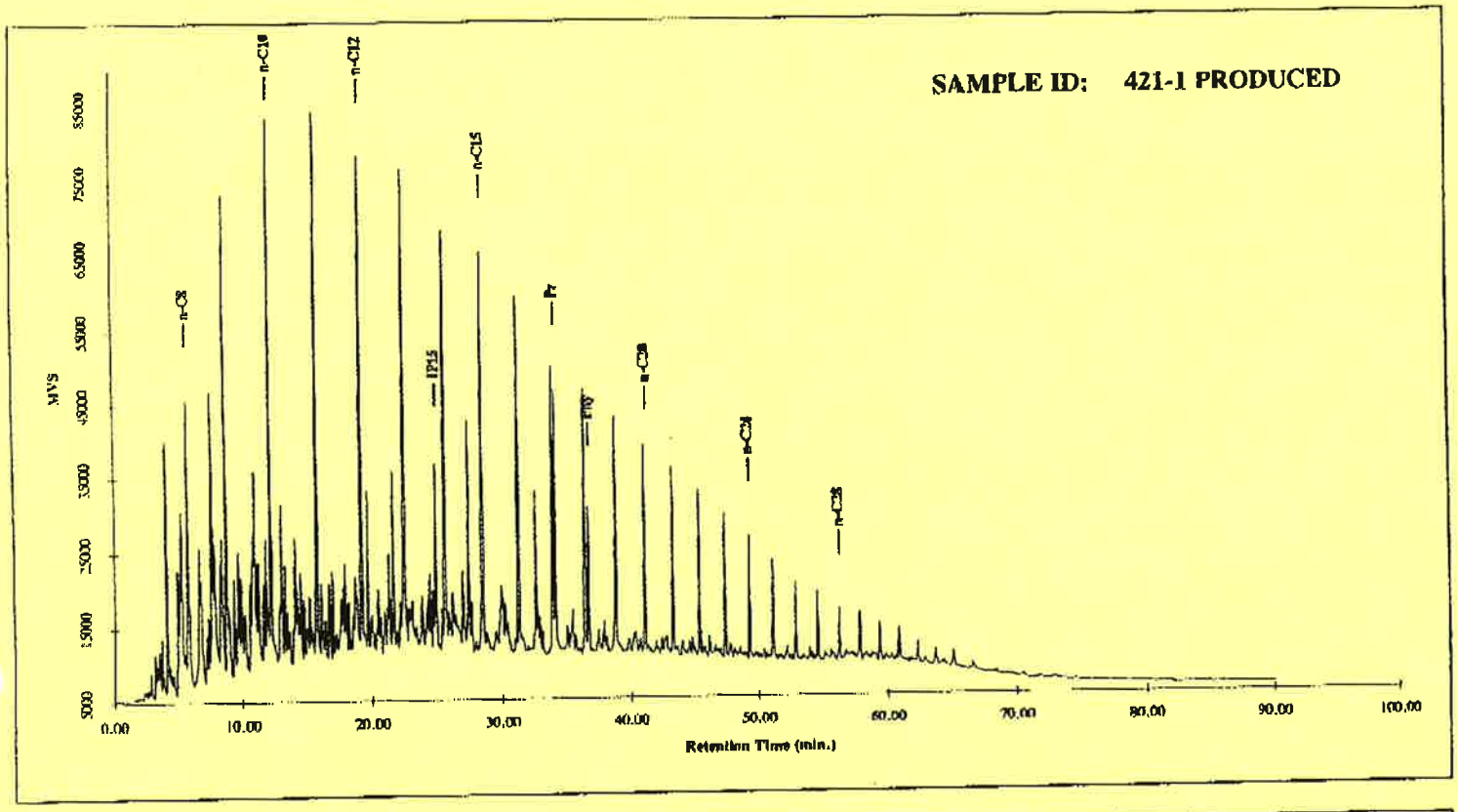

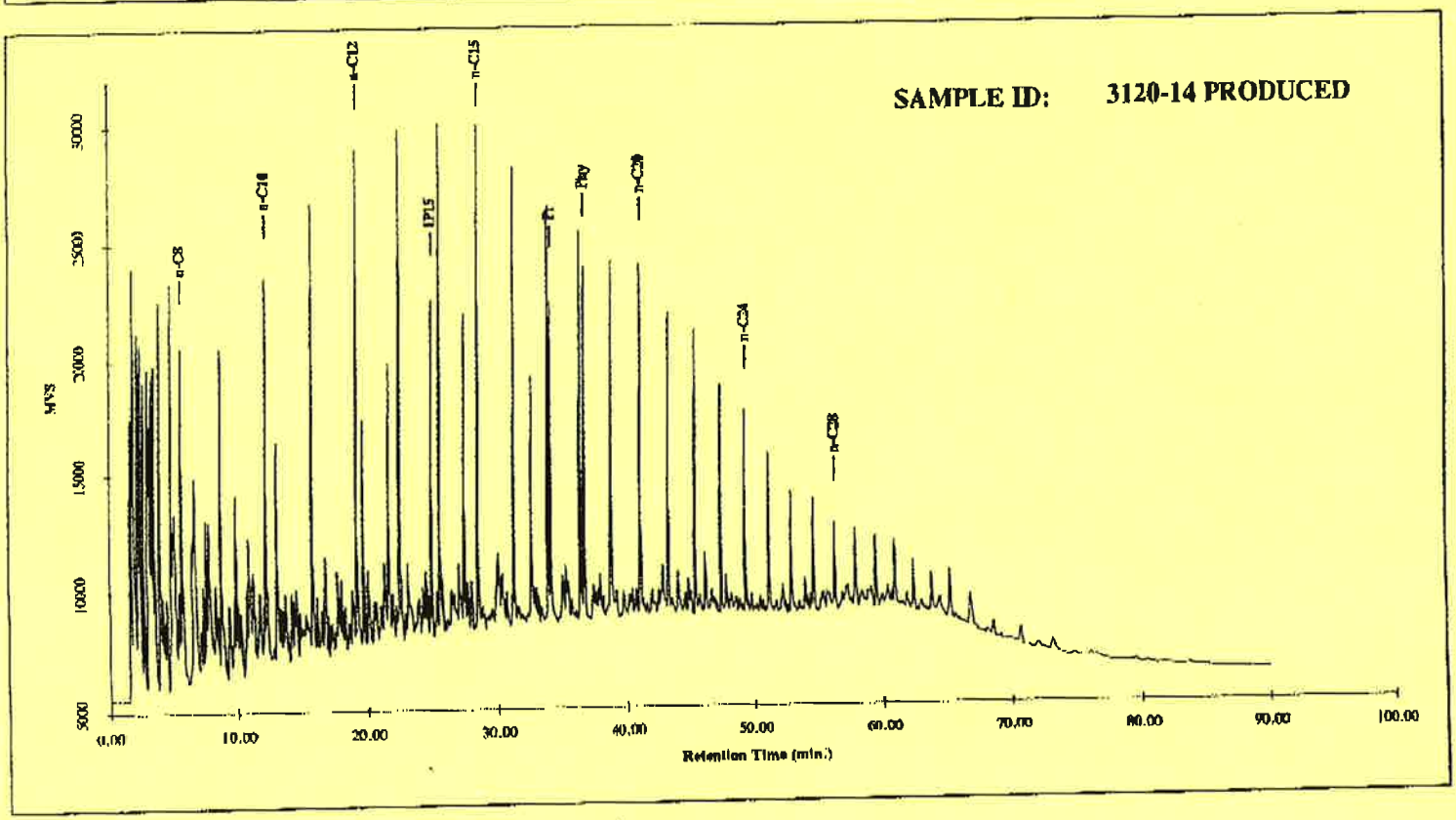

ATTACHMENT 3

Ellwood Field
State Lease PRC
Well 421-2
Workover Program

Casing:
20" 91# C 349' (19.166" ID)
13-3/8" 61# C 1999' (12.515" ID)
9" 45# C 3103' (8.032" ID)
8" Open Hole 3103'-3150'

Tubing:
3-1/2" 9.3# (2.992" ID)
2-7/8" 6.5# (2.441" ID)

Volumes:
9" x 3-1/2" = 0.0508 bpf
9" x 2-7/8" = 0.0546 bpf
9" Casing = 0.0627 bpf
3-1/2" Tubing = 0.0087 bpf
2-7/8" Tubing = 0.0058 bpf

Detailed Procedure:

1. **Notify Coastal Commission, Fire Dept, Clean Seas, SBC, APCD, DOG & SLC of pending well work. Move in and rig up Pool HD-35 doubles pulling unit on location. Spot rig with the assistance of a crane. Spot pump/pit on pier or road as necessary. Location and equipment will be set up for preventing discharge to the water and land. Clean Seas boat and equipment to be in place per permit conditions and all notifications should be made. Have 70 bbl vacuum truck on location per permit conditions. Spill prevention measures will be in place before well work is initiated. An approved refueling procedure will be followed for any equipment that must be refueled on location. Drip pans will be in place for all appropriate equipment. Tubing and equipment pulled from the well will be laid down with lining in place and bundled/wrapped to prevent surface contamination**

2. Conduct lease orientation meeting and discuss rig up. Hold pre-job safety meeting. Confirm casing and tubing pressure are zero. Set back pressure valve. Remove dry hole tree. Install **9" 3M (8.5" bore) Class III BOP.** Test BOPE against 3-1/2" and 2-7/8" tubing to 1500 psi per DOG regulations. DOG to witness BOPE test.

3. Back out hold down pins and unset inflatable packer. Re-land hanger and secure with hold down pins. Allow element to relax overnight. Pull donut to the floor while stripping through closed annular. If packer element is swabbing, rig up slick line unit. Install TIW valve on donut and rig up lubricator with pump-in sub. Pressure test lubricator and TIW valve through pump-in sub to 1500 psi. Pressure up control line to open SCSSV at 355'. Shift sliding sleeve open at 2800'. Rig down slick line company.

4. Pull existing 3-1/2” and 2-7/8” tubing completion and jewelry. Lay down jewelry and send in for reconditioning. Keep hole full at all times while pulling out of the hole. Monitor well for swabbing due to possible swollen packer element.

5. Make up 9” 45# casing scraper and run in the hole to +/- 2000’ while picking up an additional +/- 1650’ of new 3-1/2” tubing. Pull out of the hole and stand back 3-1/2” tubing out of the way of the 2-7/8” tubing.

6. Run in the hole with open ended 2-7/8” tubing (plus additional 3-1/2” tubing) to bottom of the hole at 3150’ (last tagged during work over in 2001). Rig up stimulation company. Acidize Vaqueros Sand production interval (3103’ to 3150’) by equalizing 1200 gallons of inhibited 15% HCl (72 hours), including appropriate additives, down the tubing across the sand face.

7. Pull out of the hole and lay down all 2-7/8” tubing and send in to inventory.

8. Rig up cable spooler and stainless steel tubing line spoolers. Make up ESP equipment including pump, motor and cable. Run ESP equipment, cable and chemical lines to 2000’ while banding to new tubing as per attached drawing.

9. Make up tubing hanger. Install cable feed through, control line and chemical line.

10. Land hanger in tubing spool and secure with lock down pins. Rig up slick line unit. Install TIW valve on riser and rig up lubricator with pump-in sub. Pressure test lubricator and TIW valve through pump-in sub to 1500 psi. Pressure up control line to open SCSSV at 355’. Set plug in “BX” nipple at 1912’. Pull out of the hole. Fill tubing with water (if necessary) and pressure up to 1500 psi to set hydraulic packer. Close SCSSV and bleed off pressure above to test. Pressure test annulus to 500 psi. Equalize pressure across SCSSV and pressure up on control line to open. Run in the hole and equalize fluid across plug and retrieve from 1912’. Rig down slick line company.

11. Set back pressure valve. Remove BOP. Install and test tree. Hook up cable to variable speed drive. Hook up flow line. Hook up control line and chemical line.

12. Start pump and check for proper rotation and monitor parameters using monitoring system. Rig down equipment and release crews.

ATTACHMENT 4

TABLE 1
VENOCO BEACHFRONT 421 LEASE
CONSTRUCTION EQUIPMENT

ONSITE EQUIPMENT	NUMBER	RATING (hp)	AVERAGE LOAD (%)	EM. FAC. CODE	SCHEDULE hrs/day	days/wk	weeks	EMISSION FACTORS (g/hp-hr)[1] ROG	NO_x	SO_2	CO	PM_{10}
A-Frame Truck	1	170	41	8	8	5	3	0.57	11.00	0.20	2.28	0.48
Backhoe	1	115	46.5	2	8	5	3	1.95	8.80	0.19	7.34	1.21
Ditcher/Trencher	1	150	69.5	10	6	5	2	1.16	8.80	0.21	4.60	0.86
Flat Bed Truck	1	170	41	8	8	5	3	0.57	11.00	0.20	2.28	0.48
Generator	1	40	74	10	12	5	3	1.16	8.80	0.21	4.60	0.86
Loader	1	160	54	6	0	0	0	1.12	8.80	0.19	2.71	0.76
Mud Pump (trailer mounted)	1	100	74	10	6	5	1	1.16	8.80	0.21	4.60	0.86
Welding Truck	1	150	41	8	8	5	3	0.57	11.00	0.20	2.28	0.48
10 Ton Winch (Grundo)	1	35	80	10	8	2	1	1.16	8.80	0.21	4.60	0.86
Dump Truck	1	170	75	8	6	4	2	0.57	11.00	0.20	2.28	0.48
Fusion Machine	1	25	75	10	8	5	2	1.16	8.80	0.21	4.60	0.86
Hydrotest Pump	1	60	75	10	8	3	1	1.16	8.80	0.21	4.60	0.86
Vacuum Truck	1	170	75	8	8	3	1	0.57	11.00	0.20	2.28	0.48
Well Service/Workover Rig	1	400	80	10	12	2	2	1.16	8.80	0.21	4.60	0.86
X-Ray Truck	1	150	15	8	6	5	2	0.57	11.00	0.20	2.28	0.48
Jet Pump (diesel)	0	140	80	11	8	5	0	1.27	11.20	0.21	3.03	0.95
Pile Driver (diesel)	1	400	50	11	3	4	0	1.27	11.20	0.21	3.03	0.95
Drill Rig (diesel)	1	125	80	11	5	5	0	1.27	11.20	0.21	3.03	0.95
Crane - 45 ton (power) (gasolir	1	109	80	11	8	5	0	1.27	11.20	0.21	3.03	0.95
Air Compressor (diesel)	1	40	80	11	3	4	0	1.27	11.20	0.21	3.03	0.95
Concrete Pump (diesel)	1	40	50	11	6	2	0	1.27	11.20	0.21	3.03	0.95
Welder (gasoline)	1	50	50	11	7	5	0	1.27	11.20	0.21	3.03	0.95
Fugitive Dust	0.2 acres		100	18	12	5	2					3.49
												lb/acre-hr

[1] Emission factors from APCD Form-24 - Table 2, tied to Em. Fac. Code above.

OFFSITE EQUIPMENT	NUMBER	VEHICLE TYPE	DISTANCE (miles/day)	SCHEDULE days/wk	weeks	EMISSION FACTORS (g/mile)[2] ROG	NO_x	SO_2	CO	PM_{10}
Operations Van	1	MDT	100	5	2	0.25	1.63	0.3	3.07	0.465
Pickup Truck	1	MDT	100	5	2	0.25	1.63	0.3	3.07	0.465
Camera Truck	1	MDT	100	5	1	0.25	1.63	0.3	3.07	0.465
X-Ray Truck	1	MDT	100	5	2	0.25	1.63	0.3	3.07	0.465

[2] ROG, NO_x, and CO factors from MVIE7G, 2002 Vehicle Mix. SO_2 from SCAQMD CEQA manual, Table A9-5-L. PM_{10} from SCAQMD CEQA manual, Table A9-5-K-6. All factors at 55 mph.

TABLE 2
VENOCO BEACHFRONT 421 LEASE
DAILY AND TOTAL CONSTRUCTION EMISSIONS

EQUIPMENT	MAXIMUM DAILY EMISSIONS (lb/day) ROG	NO_x	SO_2	CO	PM_{10}		TOTAL EMISSIONS (pounds) ROG	NO_x	SO_2	CO	PM_{10}
A-Frame Truck	0.7	13.5	0.2	2.8	0.6		10.5	202.8	3.7	42.0	8.9
Backhoe	1.8	8.3	0.2	6.9	1.1		27.6	124.5	2.7	103.8	17.1
Ditcher/Trencher	1.6	12.1	0.3	6.3	1.2		16.0	121.3	2.9	63.4	11.9
Flat Bed Truck	0.7	13.5	0.2	2.8	0.6		10.5	202.8	3.7	42.0	8.9
Generator	0.9	6.9	0.2	3.6	0.7		13.6	103.4	2.5	54.0	10.1
Loader	0.0	0.0	0.0	0.0	0.0		0.0	0.0	0.0	0.0	0.0
Mud Pump (trailer mounted)	1.1	8.6	0.2	4.5	0.8		5.7	43.1	1.0	22.5	4.2
Welding Truck	0.6	11.9	0.2	2.5	0.5		9.3	179.0	3.3	37.1	7.8
10 Ton Winch (Grundo)	0.6	4.3	0.1	2.3	0.4		1.1	8.7	0.2	4.5	0.8
Dump Truck	1.0	18.6	0.3	3.8	0.8		7.7	148.4	2.7	30.8	6.5
Fusion Machine	0.4	2.9	0.1	1.5	0.3		3.8	29.1	0.7	15.2	2.8
Hydrotest Pump	0.9	7.0	0.2	3.7	0.7		2.8	21.0	0.5	11.0	2.0
Vacuumn Truck	1.3	24.7	0.4	5.1	1.1		3.8	74.2	1.3	15.4	3.2
Well Service/Workover Rig	9.8	74.5	1.8	38.9	7.3		39.3	298.0	7.1	155.8	29.1
X-Ray Truck	0.2	3.3	0.1	0.7	0.1		1.7	32.7	0.6	6.8	1.4
Jet Pump (diesel)	0.0	0.0	0.0	0.0	0.0		0.0	0.0	0.0	0.0	0.0
Pile Driver (diesel)	1.7	14.8	0.3	4.0	1.3		0.0	0.0	0.0	0.0	0.0
Drill Rig (diesel)	1.4	12.3	0.2	3.3	1.0		0.0	0.0	0.0	0.0	0.0
Crane - 45 ton (power) (gasolir	2.0	17.2	0.3	4.7	1.5		0.0	0.0	0.0	0.0	0.0
Air Compressor (diesel)	0.3	2.4	0.0	0.6	0.2		0.0	0.0	0.0	0.0	0.0
Concrete Pump (diesel)	0.3	3.0	0.1	0.8	0.3		0.0	0.0	0.0	0.0	0.0
Welder (gasoline)	0.5	4.3	0.1	1.2	0.4		0.0	0.0	0.0	0.0	0.0
Fugitive Dust					8.4						83.8
Operations Van	0.1	0.4	0.1	0.7	0.1		0.6	3.6	0.7	6.8	1.0
Pickup Truck	0.1	0.4	0.1	0.7	0.1		0.6	3.6	0.7	6.8	1.0
Camera Truck	0.1	0.4	0.1	0.7	0.1		0.3	1.8	0.3	3.4	0.5
X-Ray Truck	0.1	0.4	0.1	0.7	0.1		0.6	3.6	0.7	6.8	1.0
Total	28.0	265.7	5.8	102.8	29.6	Total	155.4	1,601.6	35.2	628.1	202.2

ATTACHMENT 5

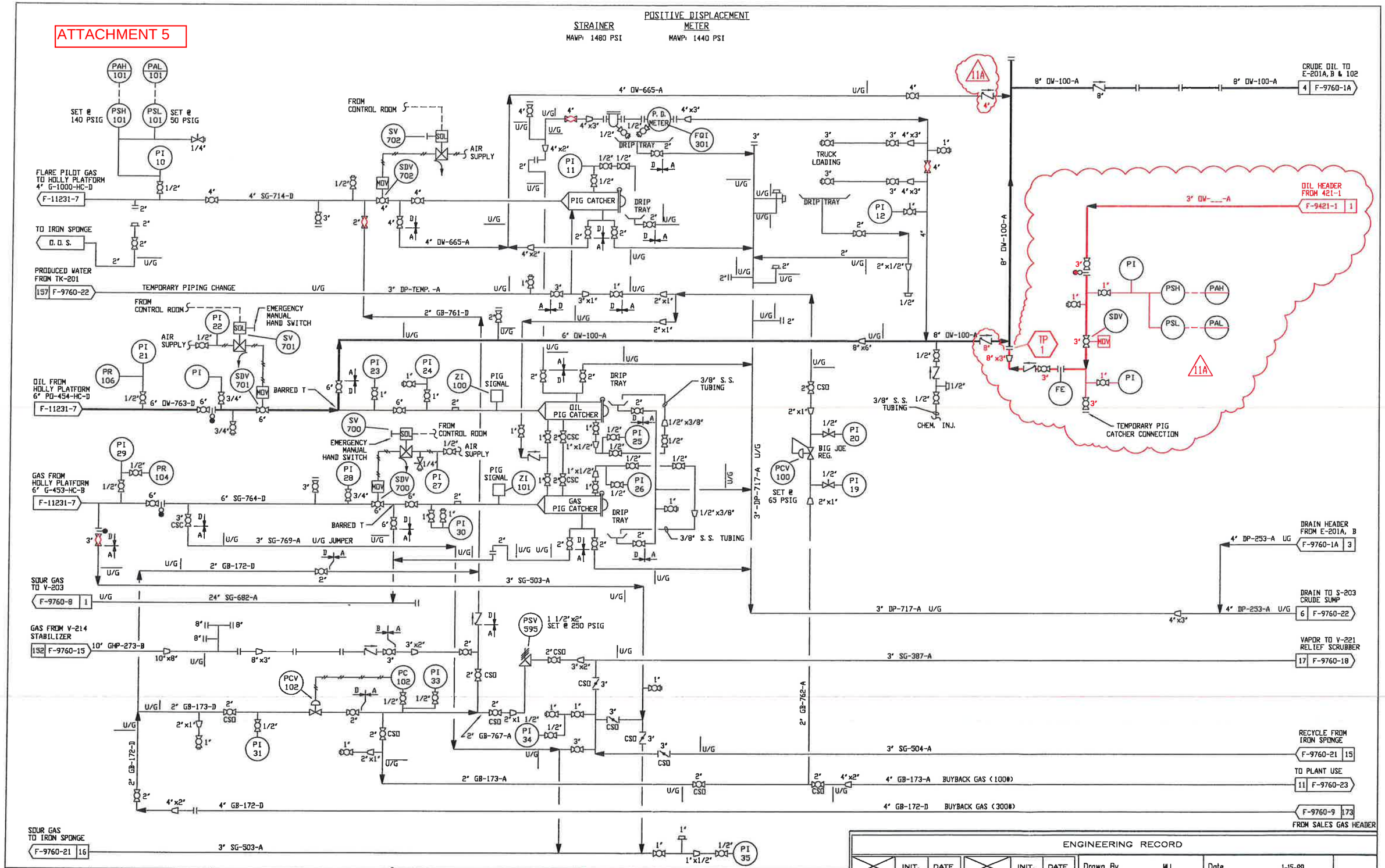

CONFIDENTIAL
This drawing is based on licensed information & is not to be used other than in the operation & maintenance of the plant for which it was prepared. This drawing is the sole property of Venoco Inc.

MECHANICAL FLOW DIAGRAM
PIG CATCHERS
ELLWOOD ONSHORE FACILITIES

VENOCO INC.
6267 Carpinteria Ave Suite 100 Carpinteria CA. 93013

Mark	Date	Revision	By	App'd
11A	05/06/13	ADDED 3" OIL LINE FROM 421 LEASE	JT	
11	09/12/12	AS-BUILT SPEC. BRAKE	REV	REV
10	11/05/08	ADDED CHECK VALV. @ CHEM. INJ. POINT & REVISED PIG CAT. DRAINS.	REV	REV
9	10/23/07	CHANGE LINE NO FROM 8" DW-101-A TO 8" DW-100-A	REV	REV

ENGINEERING RECORD

	INIT.	DATE		INIT.	DATE
DRAWN			ENGINEER		
ELEC.			CONST.		
PROJECT ENGINEER			OPERAT'NS		

Drawn By	MLL	Date	1-15-89
Revised	3-15-95	Scale	NONE
Project Engr.	G. Barker	Dwg. No.	F-9760-1

11A

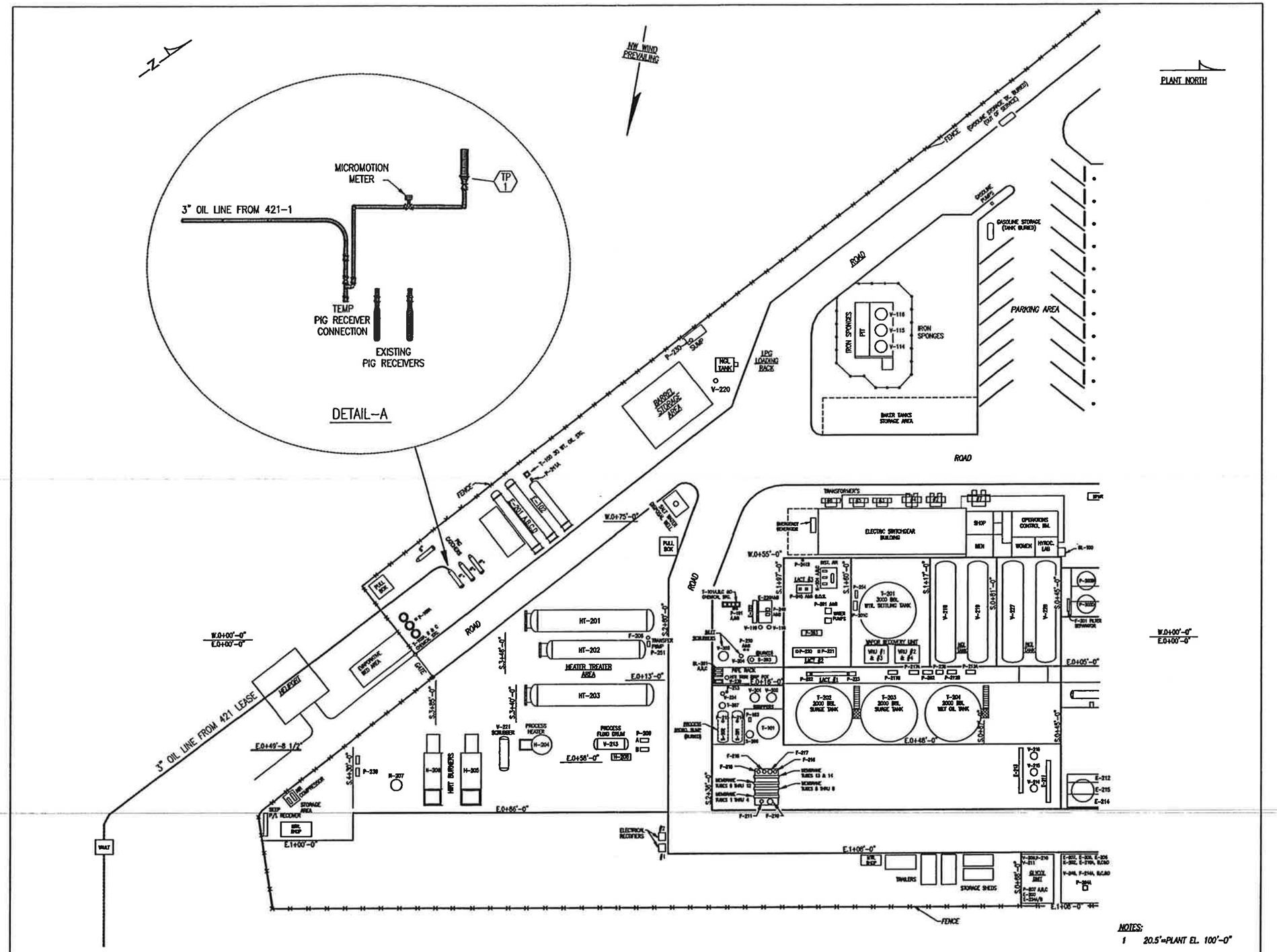

NOTES:
1 20.5'=PLANT EL. 100'-0"

CONFIDENTIAL
This drawing is based on licensed information & is not to be used other than in the operation & maintenance of the plant for which it was prepared. This drawing is the sole property of Venoco Inc.

PLOT PLAN
ONSHORE FACILITIES
PLOT PLAN INDEX
SOUTH ELLWOOD FIELD
SANTA BARBARA COUNTY, CALIFORNIA

VENOCO INC.
6267 Carpinteria Ave Ste 100, Carpinteria, CA. 93013

Mark	Date	Revision	By	App'd
6A	5/06/13	ADDED 3" PIPELINE FROM 421-LEASE	REW	JT
6	11/3/12	REMOVED V-238	REW	REV
5	7/11/06	ADDED 6 TUBES TO GRACE MEMBRANE UNIT	REW	REV
4	02/17/03	AS BUILT & REMOVED V-111, 112, 1803, 1804 & P-1803A	REW	REV

ENGINEERING RECORD

	INIT.	DATE		INIT.	DATE
DRAWN			ENGINEER		
ELEC.			CONST.		
PROJECT ENGINEER	REV	10/17/01	OPERAT'NS		

Drawn By M.L. Lacky — Date 8/91
Revised — Scale 1"=20'-0"
Project Engr. Don R. Patterson — Drg. No. F-6789 — 6A

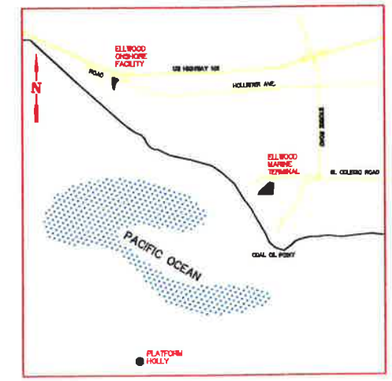

VICINITY MAP
NOT TO SCALE

BEACHFRONT 421 RETURN TO PRODUCTION

OVERALL PLOT PLAN

ISSUED FOR REVIEW
MAY 06, 2013

HORIZ: 200' 0' 200' 400'

G-040

DWG. NO.	REFERENCE DRAWINGS	REV.	DATE	REVISION DESCRIPTION	DR.	CH.
		A	05/03/13	ISSUED FOR REVIEW	REW	JT

SPEC Services, Inc.
1300 Bluefield Street
Fountain Valley, CA 92708
(714) 863-8011

G:2488A_G040:100

DRAWN	KD	DATE 05/13/04
DESIGNED	TM	
CHECKED		
ENGINEER		
APPROVED	GKR	
CLIENT	VENOCO, INC.	

VENOCO INC.

BEACHFRONT 421 RETURN TO PRODUCTION
ELLWOOD ONSHORE FACILITIES
DRAWING INDEX

SCALE: AS SHOWN
DRAWING NUMBER: 2488A-G-040
REV. A

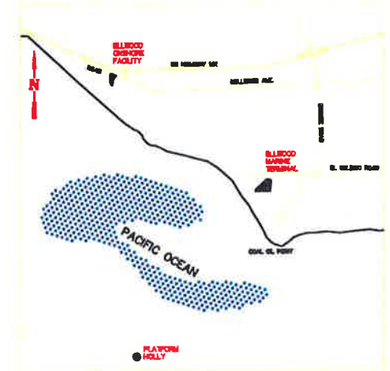

VICINITY MAP
NOT TO SCALE

NOTES:
1. EXISTING 6" OIL LINE TO BE USED FOR PROPOSED 3" FLOWLINE CONTAINMENT CASING.

ISSUED FOR REVIEW
MAY 06, 2013

1"=100' 100' 0' 100' 200'

G-041

DWG. NO.	REFERENCE DRAWINGS	REV.	DATE	REVISION DESCRIPTION	DR.	CH.
		A	05/05/13	ISSUED FOR REVIEW	REW	JT

SPEC

G:2488A_G041:1200

DRAWN	EWV	DATE 05/13/04
DESIGNED	SLH	
CHECKED		
APPROVED		
DRAWING NUMBER	GKR	
CLIENT	VENOCO, INC.	

VENOCO INC.

BEACHFRONT 421 RETURN TO PRODUCTION
ELLWOOD ONSHORE FACILITIES
OVERALL PLOT PLAN

SCALE	DRAWING NUMBER	REV.
1"=100'	2488A-G-041	A

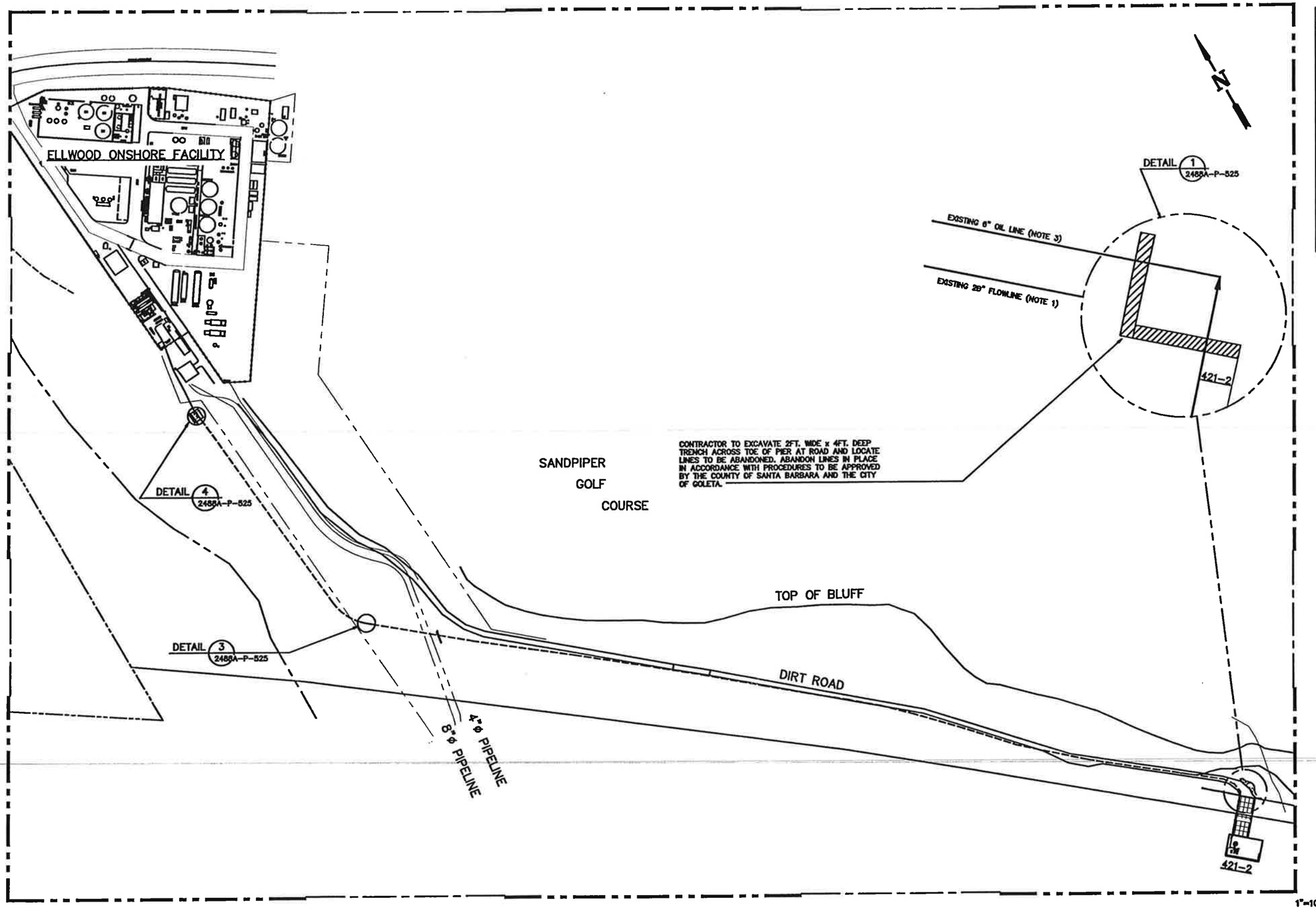

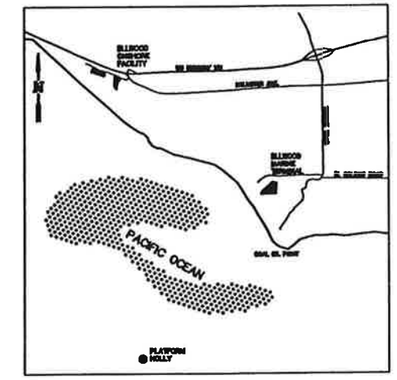

VICINITY MAP
NOT TO SCALE

LEGEND:

= TO BE DEMOLISHED

NOTES:

1. EXISTING 29" FLOWLINE TO BE CLEANED AND ABANDONED.
2. EXISTING 6" OIL LINE TO BE CLEANED AND USED AS CASING FOR 3" NEW PIPELINE BETWEEN PIER 421-2 AND TIE-IN AT EOF OIL HEADER.
3. EXACT LOCATION OR ROUTING OF LINES NOT KNOWN. CONTRACTOR TO VERIFY & DOCUMENT LOCATION OF LINES.

ISSUED FOR REVIEW
MAY 06, 2013

1"=100' 100' 0' 100' 200'

G-043

DWG. NO.	REFERENCE DRAWINGS	REV.	DATE	REVISION DESCRIPTION	DR.	CH.
		A	05/05/13	ISSUED FOR REVIEW	REW	JT

SPEC SERVICES

SPEC Services, Inc.
17101 Bushard Street
Fountain Valley, CA 92708
(714) 963-8077

G:2488A0043:1200

DRAWN	JJC	DATE	01-08-02
DESIGNED	SLH		
CHECKED			
ENGINEER	–		
MANAGER	GKR		
CLIENT	VENOCO, INC.		

VENOCO

BEACHFRONT 421 RETURN TO PRODUCTION
ELLWOOD ONSHORE FACILITIES
DEMOLITION PLAN

SCALE 1"=100' | DRAWING NUMBER 2488A-G-043 | REV. A

R.O.W.

ENV.

SANDPIPER – GOLF TRUST
A.P.N. 079-210-059

ALIGNMENT

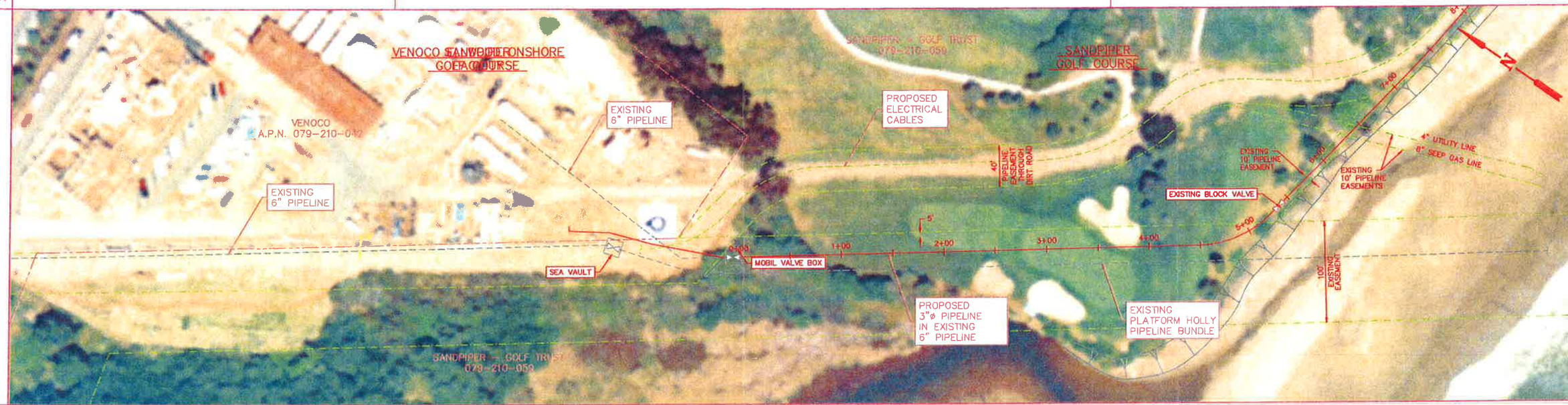

STATIONING

PROFILE

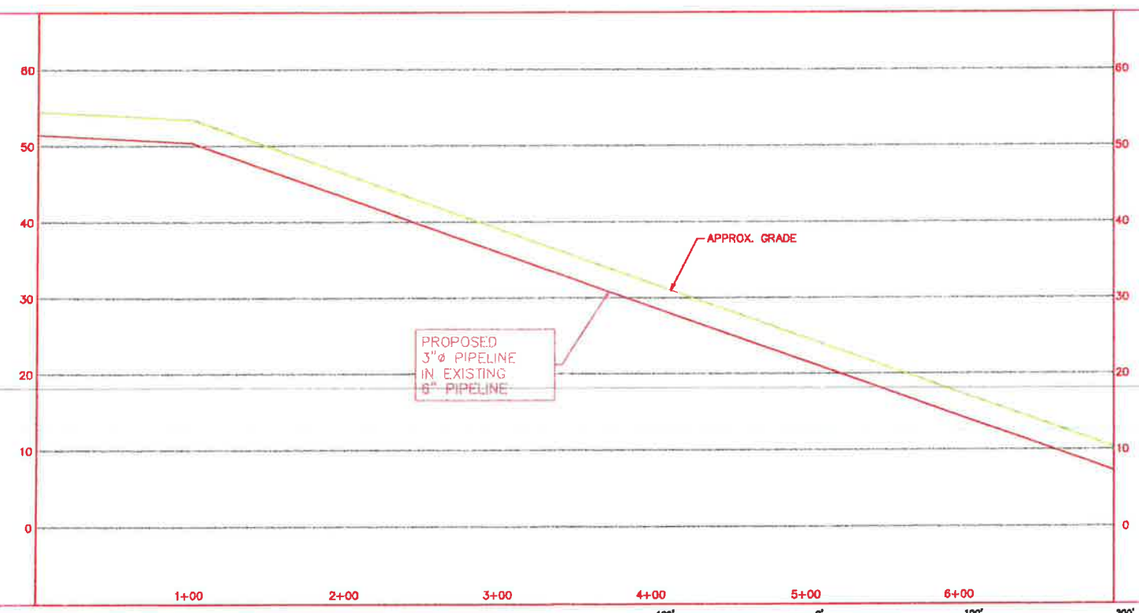

ISSUED FOR REVIEW
MAY 06, 2013

HORIZ: 100' 0' 100' 200'

VERT: 20' 0' 20' 40'

A-101

DWG NO	REFERENCE DRAWINGS	REV.	DATE	REVISION DESCRIPTION	DR.	CH.
		A	05/06/13	ISSUED FOR REVIEW	REW	JT

SPEC

K:\2488\ALIGN\2488A101:50

DRAWN MT DATE 08/04/01
DESIGNED
CHECKED T. MORRISON
CHECKED
APPROVED
CLIENT VENOCO PETROLEUM

VENOCO INC.

BEACHFRONT 421 RETURN TO PRODUCTION
ELLWOOD ONSHORE FACILITIES – VENOCO, INC.
ALIGNMENT SHEET

SCALE AS SHOWN

DRAWING NUMBER 2488A-A-101

REV. A

R.O.W.

ENV.

SANDPIPER – GOLF TRUST
A.P.N. 079-210-059

ALIGNMENT

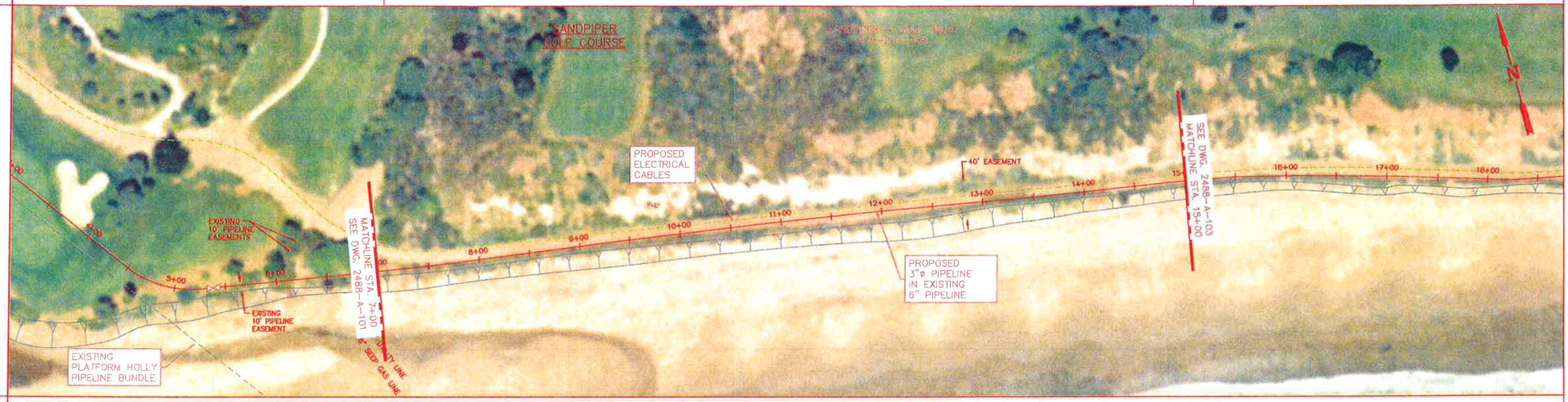

STATIONING

PROFILE

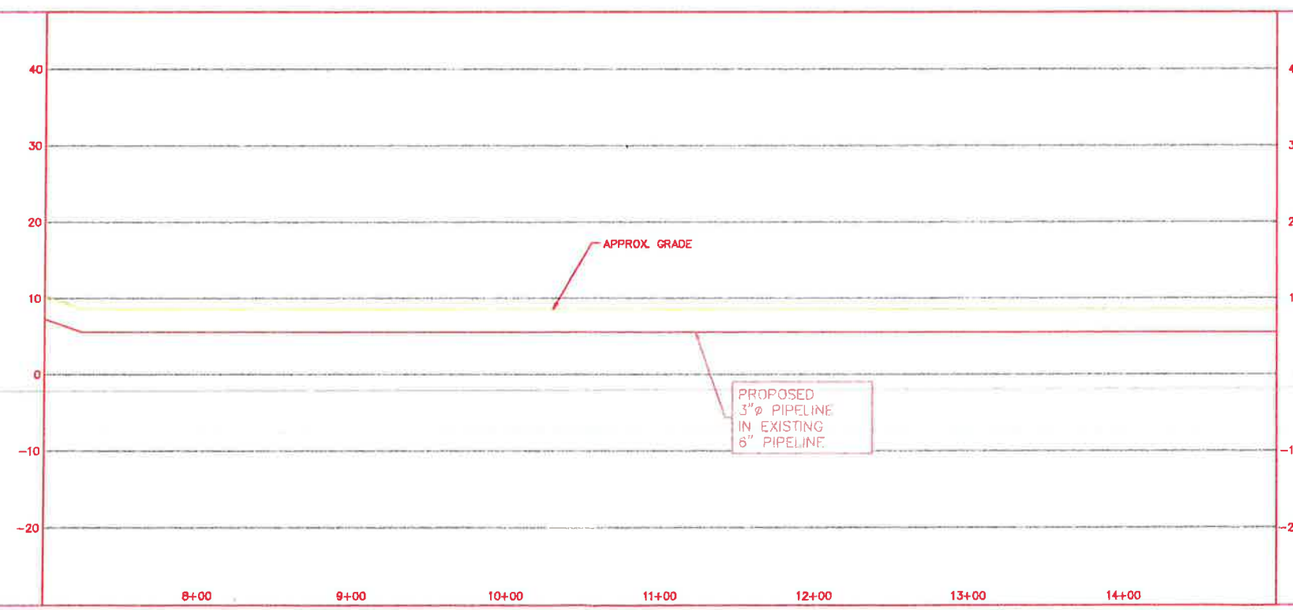

ISSUED FOR REVIEW
MAY 06, 2013

HORIZ: 100' 0' 100' 200'

VERT: 20' 0' 20' 40'

A-102

DWG. NO.	REFERENCE DRAWINGS	REV	DATE	REVISION DESCRIPTION	QA	CH
		A	05/06/13	ISSUED FOR REVIEW	REW	JT

SPEC

K:\2488\ALIGN\2488A102:50

DRAWN TM DATE 06/04/01
DESIGNED
CHECKED T. MORRISON
ENGINEER
MANAGER
CLIENT VENOCO PETROLEUM

VENOCO INC.

BEACHFRONT 421 RETURN TO PRODUCTION
ELLWOOD ONSHORE FACILITIES – VENOCO, INC.
ALIGNMENT SHEET

SCALE AS SHOWN
DRAWING NUMBER 2488A-A-102
REV A

R.O.W.

ENV.

SANDPIPER – GOLF TRUST
A.P.N. 079-210-059

ALIGNMENT

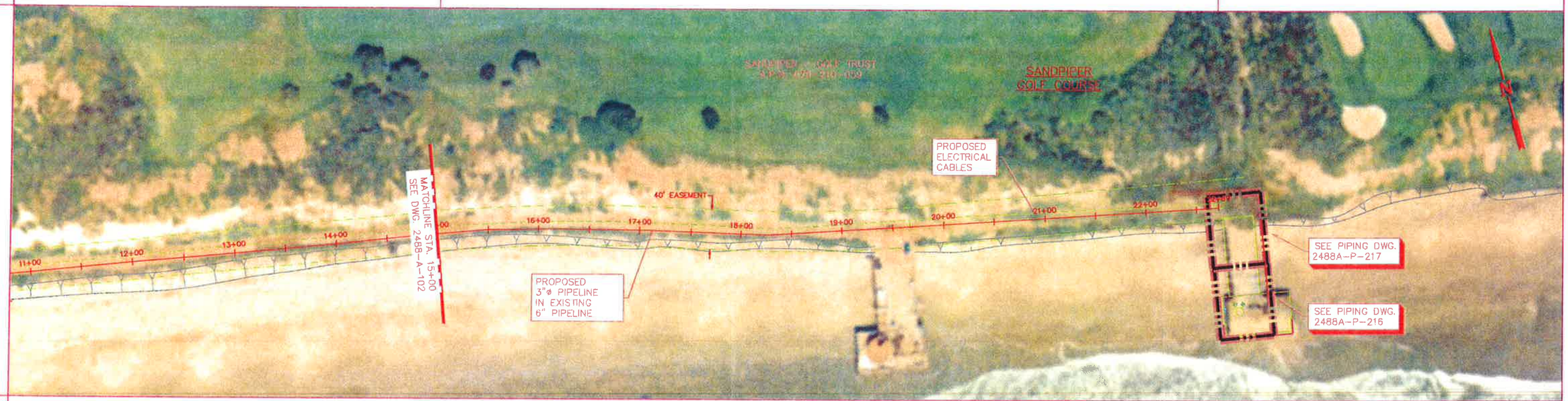

STATIONING

PROFILE

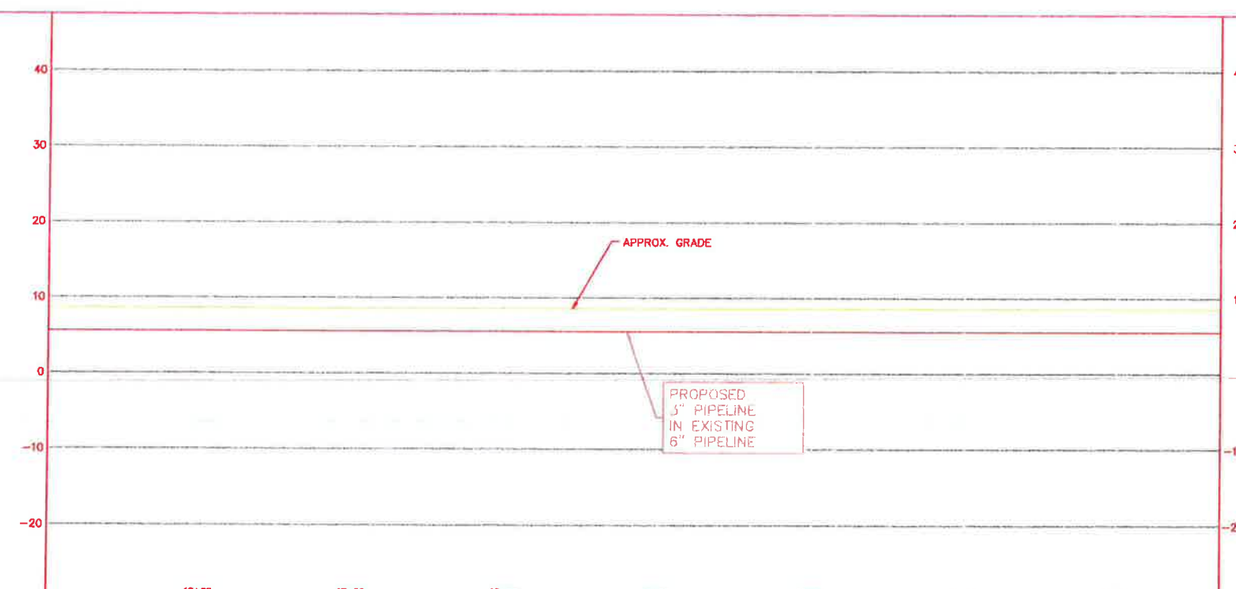

ISSUED FOR REVIEW
MAY 06, 2013

HORIZ: 100' 0' 100' 200'

VERT: 20' 0' 20' 40'

A-103

DWG. NO.	REFERENCE DRAWINGS	REV.	DATE	REVISION DESCRIPTION	DR	CH
		A	05/06/13	ISSUED FOR REVIEW	REW	JT

SPEC

K:\2488\ALIGN\2488A103:50

DRAWN ES DATE 06/04/01
DESIGNER
CHECKED C. MORRISON
ENGINEER
MANAGER
CLIENT VENOCO PETROLEUM

VENOCO INC.

BEACHFRONT 421 RETURN TO PRODUCTION
ELLWOOD ONSHORE FACILITIES – VENOCO, INC.
ALIGNMENT SHEET

SCALE AS SHOWN
DRAWING NUMBER 2488A-A-103
REV. A

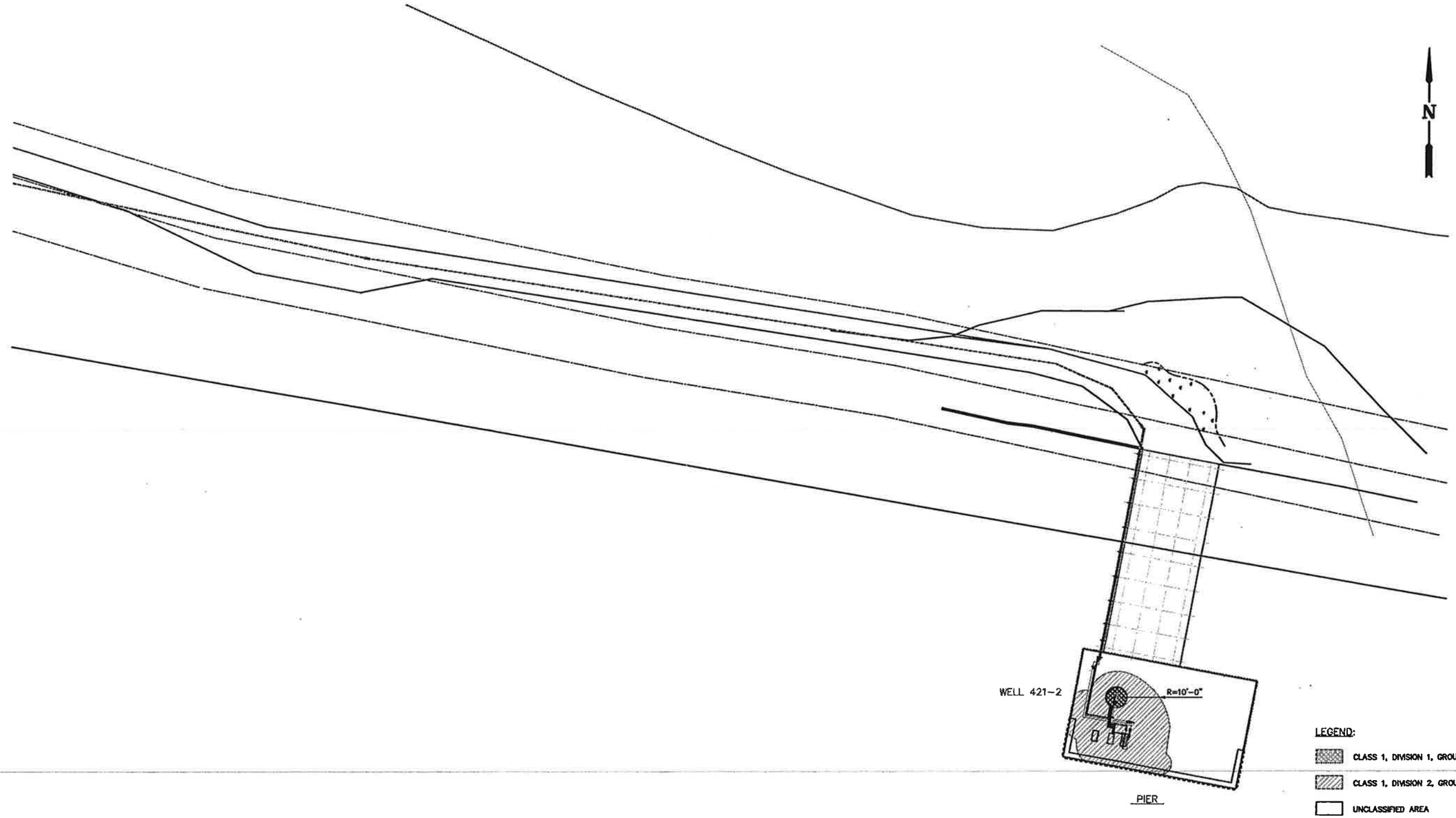

LEGEND:

- CLASS 1, DIVISION 1, GROUP D
- CLASS 1, DIVISION 2, GROUP D
- UNCLASSIFIED AREA

ISSUED FOR REVIEW
MAY 06, 2013

1"=20' 20' 0' 20' 40'

E-912

DWG. NO.	REFERENCE DRAWINGS	REV.	DATE	REVISION DESCRIPTION	DR.	CH.
		A	05/06/13	ISSUED FOR REVIEW	REW	JT

SPEC SERVICES

SPEC Services, Inc.
17101 Bushard Street
Fountain Valley, CA 92708
(714) 963-8077

J:2488AE912:240

DRAWN	JJV	DATE	05/14/04
DESIGNER	JR		
CHECKED	SLH		
ENGINEER	--		
MANAGER	GKR		
CLIENT	VENOCO, INC.		

VENOCO INC.

BEACHFRONT 421 RETURN TO PRODUCTION
ELLWOOD ONSHORE FACILITIES
ELECTRICAL AREA CLASSIFICATION PLAN

SCALE	DRAWING NUMBER	REV.
1"=20'	2488A-E-912	A

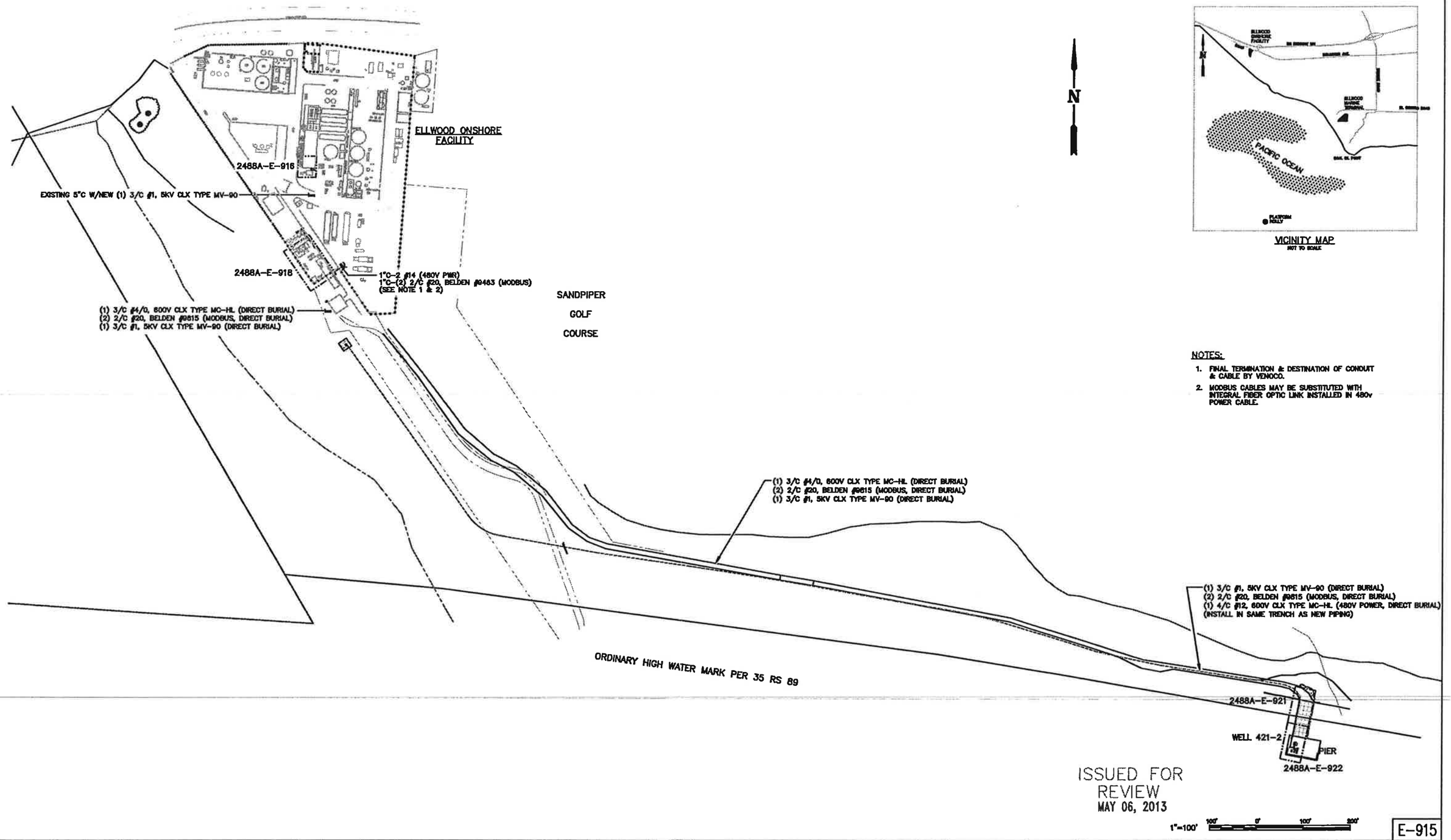

VICINITY MAP
NOT TO SCALE

NOTES:

1. FINAL TERMINATION & DESTINATION OF CONDUIT & CABLE BY VENOCO.
2. MODBUS CABLES MAY BE SUBSTITUTED WITH INTEGRAL FIBER OPTIC LINK INSTALLED IN 480v POWER CABLE.

ISSUED FOR REVIEW
MAY 06, 2013

E-915

DWG. NO.	REFERENCE DRAWINGS	REV.	DATE	REVISION DESCRIPTION	DR.	CH.
		A	05/06/13	ISSUED FOR REVIEW	REW	JT

SPEC SERVICES
SPEC Services, Inc.
17101 Bushard Street
Fountain Valley, CA 92708
(714) 963-8077
J:2488AE915:1200

DRAWN	JJV	DATE 05/14/04
DESIGNED	-	
CHECKED	SLH	
APPROVED	-	
MANAGER	GKR	
CLIENT	VENOCO, INC.	

VENOCO INC.

BEACHFRONT 421 RETURN TO PRODUCTION
ELLWOOD ONSHORE FACILITIES
ELECTRICAL PLOT PLAN & DRAWING INDEX

SCALE	DRAWING NUMBER	REV.
1"=100'	2488A-E-915	A

MODEL NUMBER: 2000 GCS (NEMA 4)

Weight: 1020 lbs Overall Height: 82.5 in. Overall Width: 38.75 in. Overall Depth: 44.50 in.

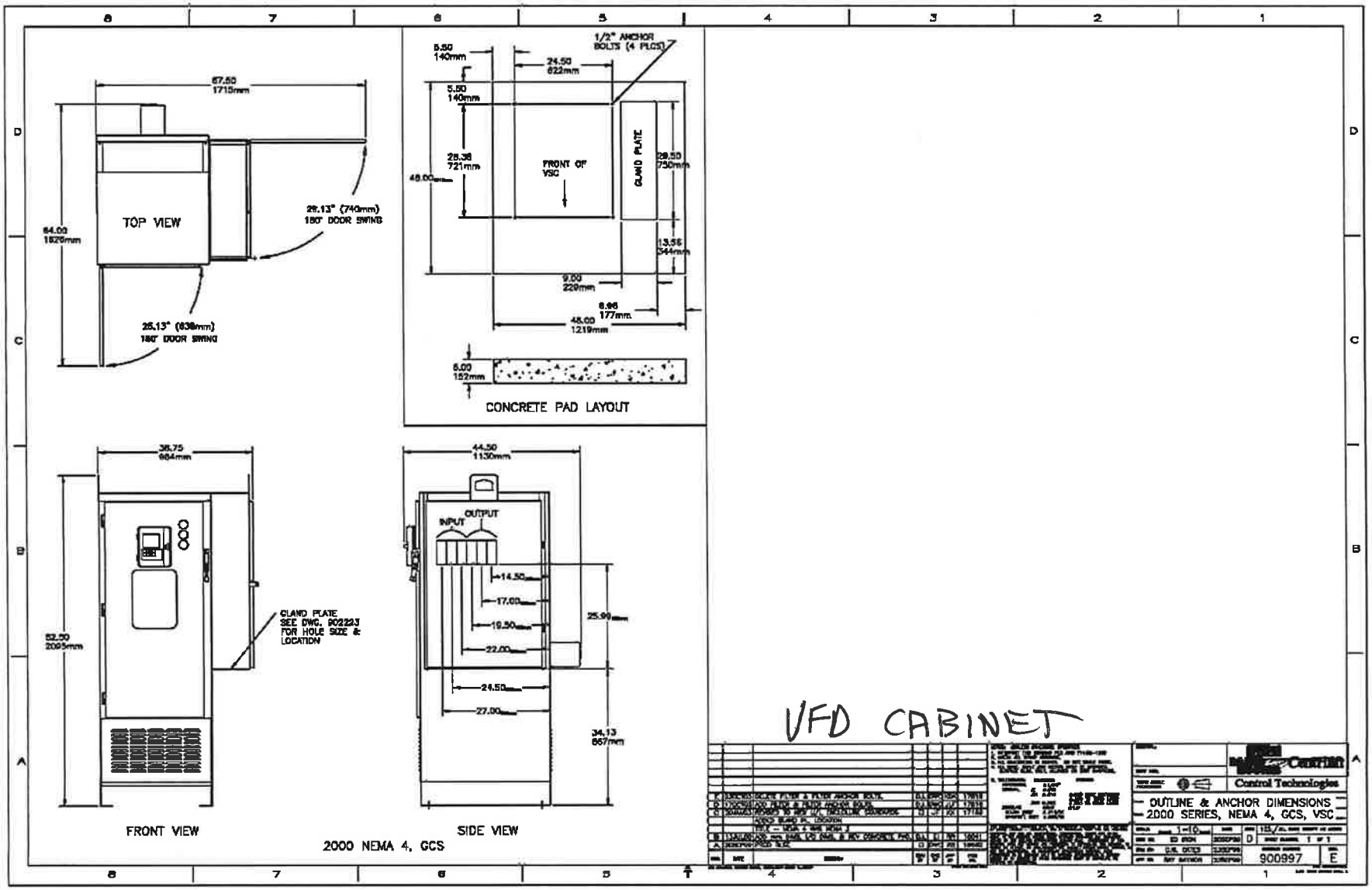

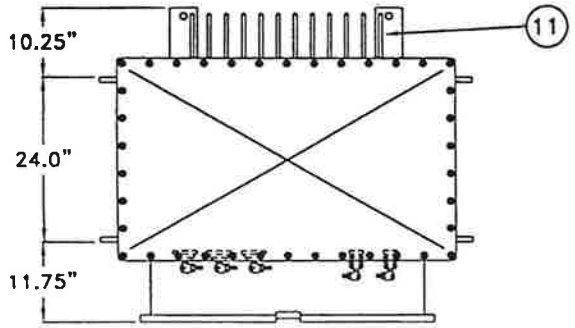

PLAN VIEW

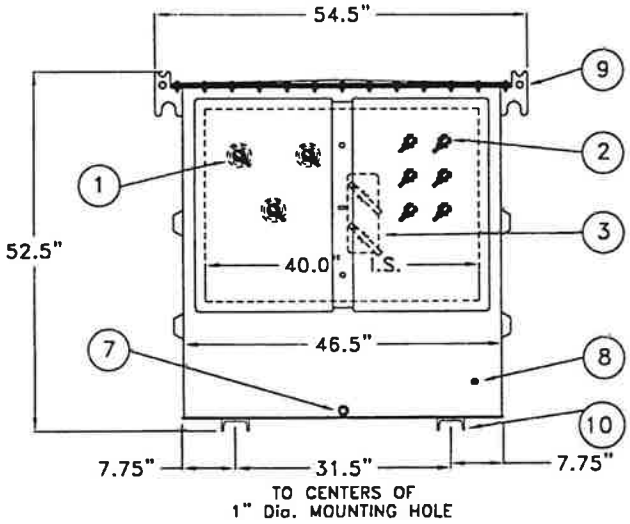

FRONT VIEW

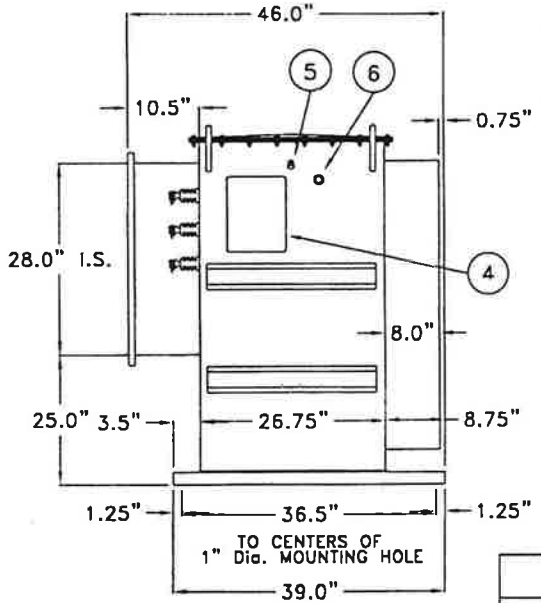

SIDE VIEW

ITEM NO.	DESCRIPTION
1	PRIMARY BUSHINGS
2	SECONDARY BUSHINGS
3	TAP CHANGER
4	NAME PLATE
5	PRESSURE RELIEF DEVICE
6	FILL PLUG
7	DRAIN PLUG
8	GROUNDING PROVISION
9	LIFTING PROVISIONS
10	CHANNEL BASE
11	COOLING PANELS

APPROX. TOTAL WEIGHT 4160 LBS.

Rev.2: 10/18/01
Rev.1: 6/08/01

DRAWING NO: 00000401

260 kVA
STEP UP TRANSFORMER
DRAWN BY: G. PHILLIPS 9/20/99
SCALE: NONE

SOUTHWEST ELECTRIC

THIS ENGINEERING DRAWING IS THE PROPRIETARY PROPERTY OF SOUTHWEST ELECTRIC CO. NOT PART OF THE PUBLIC DOMAIN, AND IS ISSUED WITH THE EXPRESS UNDERSTANDING AND AGREEMENT THAT IT IS NOT TO BE REPRODUCED OR COPIED IN WHOLE OR IN PART OR USED FOR FURNISHING INFORMATION TO OTHERS, OR USED DIRECTLY OR INDIRECTLY, IN ANY WAY DETRIMENTAL TO THE INTEREST OF SOUTHWEST ELECTRIC CO. AND IS TO BE RETURNED UPON REQUEST BY SOUTHWEST ELECTRIC CO. ALL RIGHTS RESERVED.