Appendix G

VENOCO PROJECT DESCRIPTION

VENOCO, INC.

May 6, 2013

Mr. Eric Gillies
Assistant Chief, Environmental Planning and Management
California State Lands Commission
100 Howe Avenue, Suite 100-South
Sacramento, CA 95825

Subject: PCR 421 return to production

Dear Mr. Gillies

Enclosed please find the revised detailed project description for the PRC lease 421 return to production project. The project description reflects the discussed amendment to the project of bringing the production from the 421 lease into the Ellwood Onshore Facility for processing.

Please contact me at (805) 745-2255 should require additional information or have additional questions.

Sincerely:

Stephen A. Greig
Government Relations Manager

Cc: Anne Wells, City of Goleta

Encl: 421 project description

VENOCO, INC.

STATE LEASE 421 RECOMMISSIONING PLAN

PROJECT DESCRIPTION

MAY 2013

1 LOCATION AND DESCRIPTION OF EXISTING FACILITIES

Venoco, Inc., the Operator of State Tidelands Lease PRC 421.1 (Lease 421), proposes to reinstate production from this lease. The existing facilities at Lease 421 currently include two piers located on submerged lands in State coastal waters below the bluffs marking the southern limit of the Sand Piper Golf Course. Access is provided by an existing road originating at Venoco's Ellwood Onshore Facility (EOF) just to the west of the piers. Oil was exported by a 6" pipeline connecting to Line 96. Portions of the access road and the pipeline lie within easements granted to Venoco by predecessors in interest of the Sand Piper Golf Course (APN 079-210-059) and are located in the City of Goleta. The remainder of the pipeline and access road lie upon filled lands below the State ordinary high tide line. The two piers provide support for two wells located on separate concrete caissons, identified as Well 421-1 and Well 421-2. Each steel pile pier contains concrete caissons that are approximately 67 feet long, 42 feet wide and rise approximately 20 feet above mean sea level. The piers are located one half mile south of Venoco's Ellwood Onshore Facility (EOF) on APN # 379-210-061.

The proposed work includes the installation of a new Electrical Submersible Pump (ESP) in well 421-2, installation of well safety equipment, repair of existing buried produced liquid pipeline, installation of connecting piping, production metering and process monitoring equipment within EOF, and installation of direct buried power and communications cables and provisions for process monitoring and control.

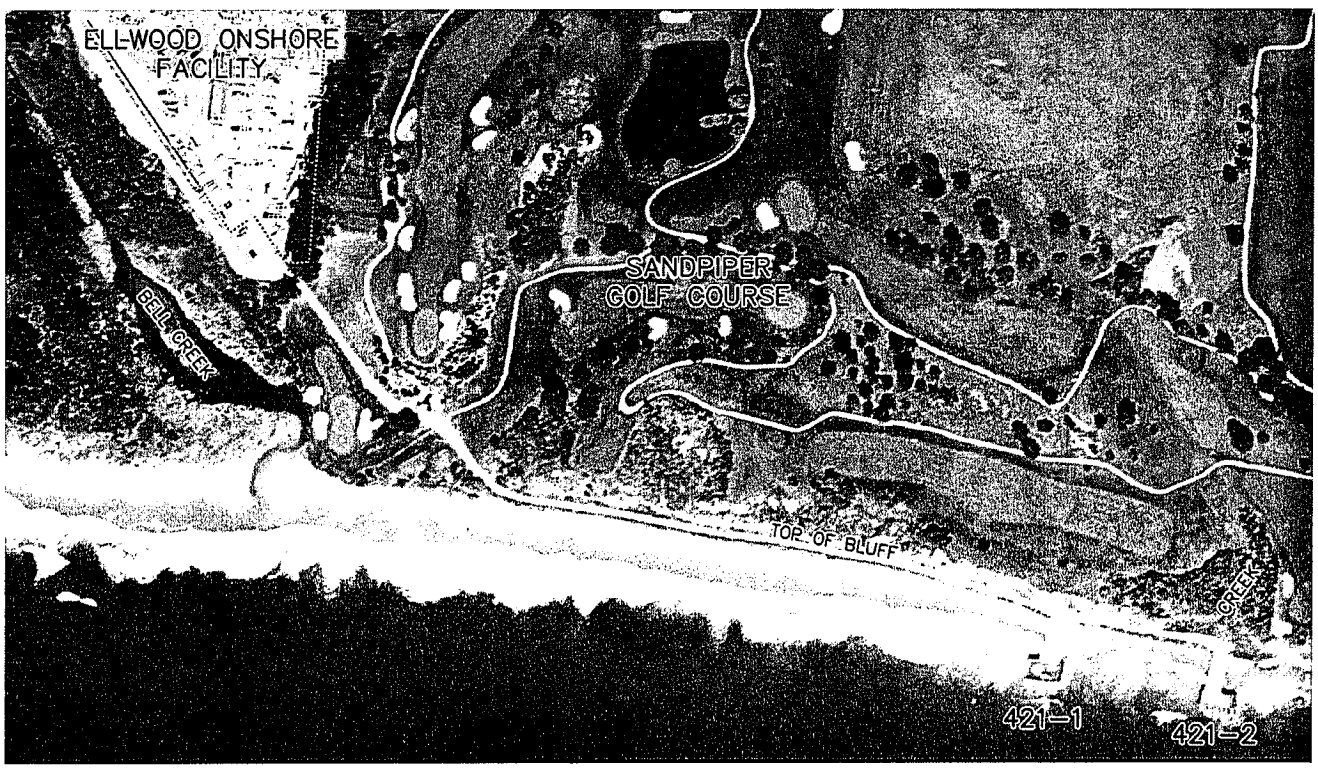

Figure 1: EOF, Sandpiper Golf Course, and PRC421 wells.

1.1 Wells 421-1 and 421-2

The Lease 421 wells were last operated by Mobil on a continuous basis in 1994. All the equipment to operate the lease was located on the piers. Oil and water was pumped from well 421-2 using a gas fired internal combustion (IC) engine on the 421-2 pier. The emulsion was piped to a second pier housing well 421-1 where the emulsion passed through a free water knock-out vessel and entered a storage tank. Oil from the tank was pumped using a gas fired IC engine through a 6" shipping line connecting to line 96. The water separated from the emulsion was disposed by re-injection into the producing formation through the disposal well 421-1.

Mobil experienced a leak on the 6" shipping line in March 1994. A 4-foot section of the line with a pinhole leak was replaced under the 12th tee of the Sandpiper Golf Course and the line was successfully hydro-tested to 190 psi. As a condition of approval of the Oil Spill Clean-up and Remediation Plan, Santa Barbara County required Mobil to submit a re-commissioning plan before placing the line back in operation. Mobil did not re-commission the pipeline and the lease was left shut-in until November 2000. Venoco submitted re-commissioning plans to the Energy Division in 1997, 1998, and 2001. The Santa Barbara County Energy Division listed Lease 421 as "Idle - application to restart pending review" in their report on the "Abandonment of Oil and Gas fields Offshore Santa Barbara County and Related Infrastructure" dated October 25, 2000.

The condition of the access road, piers, wells and production equipment had greatly deteriorated by November 2000, so the State Lands Commission required Venoco to conduct major repairs. The access road was resurfaced, rip rap and soldier piles were installed to reinforce the old seawall, the piers were completely rebuilt, the well caissons, casings and wellheads were repaired, subsurface safety valves were installed in the wells and all the production equipment was removed from the piers. During this period, a temporary flowline was run from the EOF to the well. 421-2 was produced under an Emergency permit to relieve the wellhead pressure.

Well 421-1 is located approximately 2500 feet southeast of the EOF. Well 421-1 was previously used as an injection well for water produced from Lease 421. Under this proposal, this well would be plugged and abandoned and its associated pier removed.

Well 421-2 is located approximately 325 feet east of well 421-1. Well 421-2 is an oil well that was most recently produced by natural flow during 2001. An electric submersible pump (ESP) will be installed and will be located deep inside the casing of the well below ground level. The well pump will be electrically powered from a new power cable from the EOF. The profile of the new equipment and wellhead is such that it will present minimal visual impact.

The existing access road that leads from the EOF to Lease 421 is adequate to allow for maintenance and repair purposes of the 421 well. The road is 12 feet wide and is made of float rock and base. In addition, there are several existing pipelines in the road right-of-way.

1.2 General Fluid Production Information

The Ellwood Field trends east-west along the shoreline just south of the Sandpiper Golf course (see map in Attachment 1). The field is about 4 miles long and 1/2 mile wide. The field was discovered by Barnsdall Oil Company in July 1928 when the Luton-Bell No. 1 was completed flowing 1755 Barrels of Oil per Day (BOPD) of 37.8 deg API low sulfur oil from the Lower Miocene Vaqueros formation. Development of the onshore acreage began in the late 1920's and exploitation of much of the greater tidelands section of the field started in the early 1930's using wells drilled from piers. The two remaining 421 wells were drilled from piers during 1929-1930. Peak production from the field of nearly 49 thousand barrels of oil per day occurred in 1930. Early wells commonly flowed about 2,500 barrels of clean oil daily, but water encroachment and decrease in pressure

necessitated the use of gas lift and pumping. The existence of a second Western structural high was determined from well 428-9 in 1937. The entirely offshore Western high was developed using high angle wells drilled from shore during the 1940's from Signal's Dos Pueblos property into leases PRC 129 and 208. The last producing wells were completed in the 1960's. Most of the wells located on piers were abandoned in the 1950's. The caisson of 421-10 was removed and replaced with a bird sanctuary. Arco continued to produce the Dos Pueblos wells until 1993. There was no detectable presence of hydrogen sulfide in the Dos Pueblos produced gas despite the injection of 35 Million Barrels (MMB) of produced water into the PRC129 and 208 wells. Arco abandoned the last of the Dos Pueblos wells in 1996.

Recent fluid production information is only available for well 421-2 since it is the only existing production well. The gravity of the oil from 421-2 is 35° API. The sulfur content of the crude production is less than 0.6%. The producing gas oil ratio is very small. It was last measured at less than 100 SCF/STB in 2001. The produced gas meets current CARB specifications for pipeline quality gas. The H2S content, as for all Vaqueros production in the Channel, is less than 10 ppm. Attachment 2 provides oil specifications for the Ellwood Field (Lease 421), oil analytical results from 421-2, and a gas analysis.

Well 421-1 initially tested in 1929 at 3220 BOPD of 36.1 deg API oil and 750 MCF/d of gas from the Vaqueros. It has not produced since 1972. From 1972 until 1994, it was used as a water disposal well. It was tested briefly during December 2000 but produced only minor amounts of gas. 421-1 will be plugged and abandoned and its associated pier removed.

Historical fluid production for 421-2 is provided below:

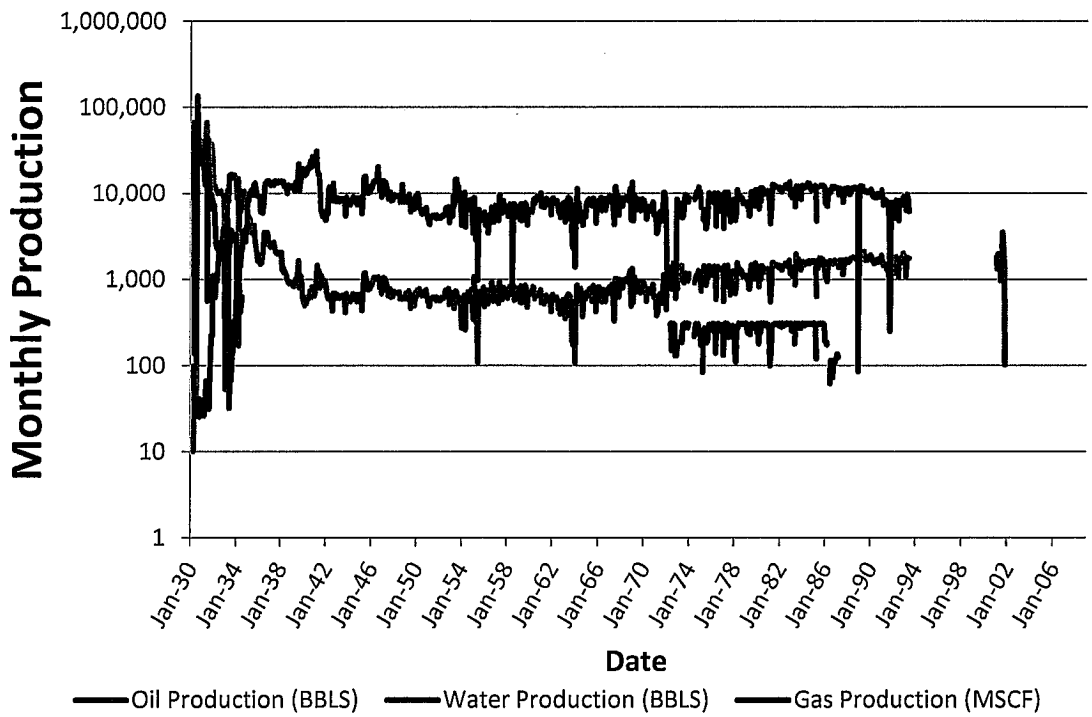

GOODE CORE ANALYSIS SERVICE

Company: Veneco Inc.
Well: Various
Field: Offshore
Job No: 101189

Date: 3/13/00

CRUDE OIL ANALYSIS

SAMPLE I.D.	VISC.(cp) 122F	VISC.(cp) 200F	API	EXTRACTED WEIGHT(gm)
SEEP	>150000			
421-2	<9		35.7	
3120-14	128		16.6	

Viscosity measured by a Cone and Plate Viscometer
Gravity measured by pycnometer

GOODE CORE ANALYSIS SERVICE

Company: Veneco Inc.
Well: Various
Field: Holly
County,St: State Offshore

File No.: 101189
Date: 6/27/2001
Sample Type: Various

PYRO-CHROMATOGRAPHY TABULAR DATA

Smpl #	Sample ID	17+18/ Pr+Phy	IP15/ n-C14	Pr/Phy	CPI	% <n-C13	% >n-C18	% n-C/ Total	Total Area
1	421-2 Prod	1.29	0.50	1.63	1.45	37.5	34.7	21.8	3.4
2	3120-14 Prod	1.16	0.69	0.92	0.98	28.8	49.8	18.0	1.8
3	Seep Oil	1.05	0.75	0.81	1.13	2.3	85.1	15.4	3.3
4	421-2 Soil Sam	1.00	0.95	0.85	1.00	7.7	71.5	13.5	4.0
5	421-1 Soil Sam	1.00	0.92	0.93	0.99	8.0	70.5	11.1	3.4
6	After 2 Days	0.98	0.71	0.92	0.98	2.6	74.0	15.6	2.4
7	After 7 Days	1.10	0.78	0.84	1.09	0.2	83.9	17.7	1.2
8	After 14 Days	1.06	0.97	0.58	1.01	0.8	94.0	16.1	0.2

421-2 was produced intermittently during 2001 under the Emergency Permit. In December 2000, it flowed at rates in excess of 1000 BOPD and produced 18279 barrels of clean oil with no measurable water or gas production through October 2001. This oil was shipped to the Ellwood Marine Terminal and sold along with South Ellwood crude from platform Holly.

Based on the proposed ESP sizing for the 421-2 well, the monthly average oil production rate at the wellhead is expected to be no more than 150 BOPD over the life of the well. Instantaneous production should not exceed 1,000 BOPD. The gas production rate should not exceed 70 Mcf/d. The gas production rate was too small to measure during the tests done in 2001.

It is expected that water breakthrough will occur shortly after the start of continuous production. The water cut will increase over the course of the production life of the well until it would no longer be economically viable to produce. Based on current projections, the estimated productive life of the 421-2 well would be at least 20 years. Estimated flush production is 150 BOPD the first month due to the well being shut-in and converges on 50 BOPD after two years matching the last ten years of continuous historical production. The 421-2 production forecast is given below.

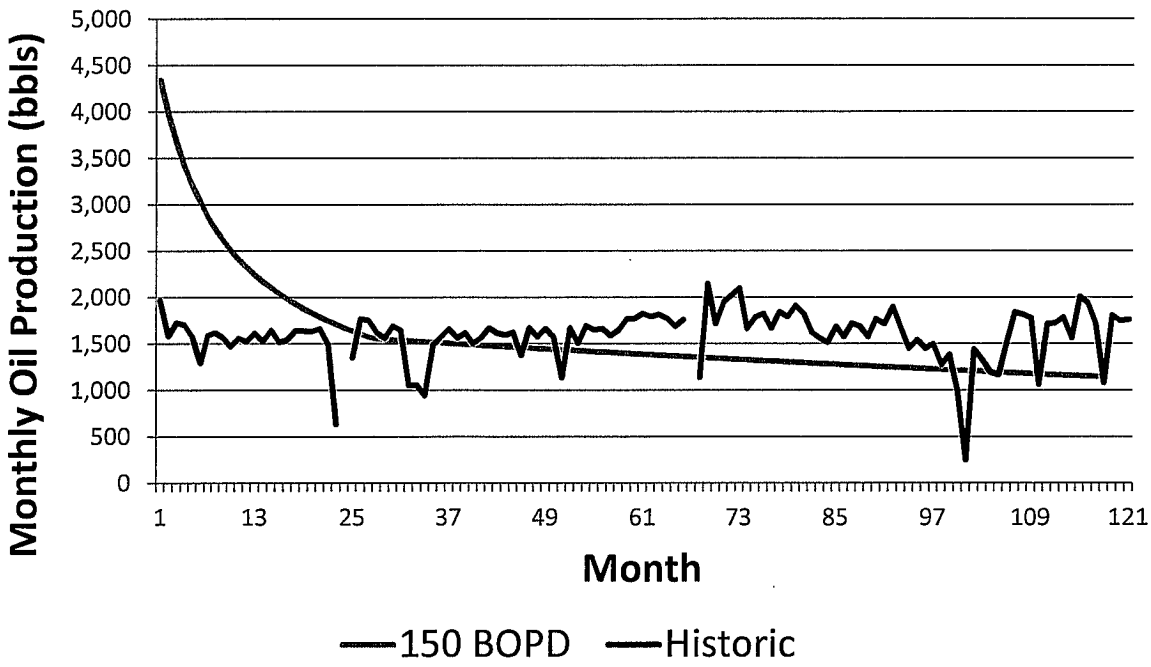

1.3 Platform Holly

Platform Holly was built on PRC 3242.1 in 1966 to produce the reserves from the Rincon formation and has been in continuous operation ever since. The platform produces oil/water emulsion and natural gas that are separately transported via subsea pipelines to the EOF. A portion of the produced gas is compressed to high pressure and recycled for artificial lift (gas lift) in producing wells.

Platform Holly is a self-contained oil drilling and production platform. The platform sits in about 211 feet of water about 2.4 miles south of the 421 piers.

No process equipment related to 421 lease production is to be installed aboard platform Holly.

2 PROPOSED PROJECT

2.1 Lease 421 Wells

Currently, both PRC421 wells are shut-in and equipped with subsurface safety valves and packers. Venoco, Inc. proposes to place 421-2 back into service and have well 421-1 plugged and abandoned. Under this proposal, well 421-2 would be equipped with an Electric Submersible Pump (ESP) which would be located inside the casing of the well approximately 2000' below ground level. Electrical equipment, instrumentation and well control devices would be located near the wellhead and connected to remote alarm annunciation devices at the EOF. Produced fluids from 421-2 will be transported by pipeline directly to EOF for processing.

2.1.1 Well 421-1

With produced fluids from Well 421-2 going directly into EOF, Well 421-1 will no longer be needed. Applications to plug and abandon the well and remove its associated pier will be prepared and submitted shortly after 421-2 well is returned to production. Approval for abandonment and decomissioning will be obtained through a separate review process.

2.1.2 Well 421-2

The well 421-2 will have an ESP installed (see workover program in Attachment 3). A motor control panel (Variable Frequency Drive) and a step-up transformer located at the EOF will supply 1500V power to the pump. For security reasons, the motor control panel and transformer will be located at the EOF rather than at the 421-2 pier. The ESP transformer and control panel would connect to 421-2 via a direct buried 200 kVA power cable. A second utility electric power cable will be laid in the same excavation with an integral communication cable for data transfer for SCADA purposes. 480V utility power will be supplied to the 421-2 pier and a small step down transformer will be installed in an electrical panel to drop the voltage to 120V. A 120V power receptacle will be provided at the 421-2 well site to support future well testing, data transmission , chemical injection, or temporary lighting, should the need arise. A 120V utility power outlet will be located inside of the power panel.

The wellhead will be equipped with current safety equipment and follow safety design criteria as specified in API RP 14C, *Safety Analysis Function Evaluation (SAFE) of Offshore Petroleum Production Systems*. At a minimum, these standards will provide for the installation of a Sub-Surface Safety Valve (SSSV) and Surface Safety Valve (SSV) on the well. The oil discharge line will be equipped with High and Low pressure sensing switches. In the event that these switches report high or low pressure, or in the event that any alarm forces a shutdown of the well, then the Surface Safety Valve and Sub Surface Safety Valve will automatically close and prevent oil from being brought to the surface. To assure fail-safe operation, these valves will be designed to

Ellwood Field
State Lease PRC
Well 421-2
Workover Program

Casing:
20" 91# C 349' (19.166" ID)
13-3/8" 61# C 1999' (12.515" ID)
9" 45# C 3103' (8.032" ID)
8" Open Hole 3103'-3150'

Tubing:
3-1/2" 9.3# (2.992" ID)
2-7/8" 6.5# (2.441" ID)

Volumes:
9" x 3-1/2" = 0.0508 bpf
9" x 2-7/8" = 0.0546 bpf
9" Casing = 0.0627 bpf
3-1/2" Tubing = 0.0087 bpf
2-7/8" Tubing = 0.0058 bpf

Detailed Procedure:

1. **Notify Coastal Commission, Fire Dept, Clean Seas, SBC, APCD, DOG & SLC of pending well work. Move in and rig up Pool HD-35 doubles pulling unit on location. Spot rig with the assistance of a crane. Spot pump/pit on pier or road as necessary. Location and equipment will be set up for preventing discharge to the water and land. Clean Seas boat and equipment to be in place per permit conditions and all notifications should be made. Have 70 bbl vacuum truck on location per permit conditions. Spill prevention measures will be in place before well work is initiated. An approved refueling procedure will be followed for any equipment that must be refueled on location. Drip pans will be in place for all appropriate equipment. Tubing and equipment pulled from the well will be laid down with lining in place and bundled/wrapped to prevent surface contamination**

2. Conduct lease orientation meeting and discuss rig up. Hold pre-job safety meeting. Confirm casing and tubing pressure are zero. Set back pressure valve. Remove dry hole tree. Install **9" 3M (8.5" bore) Class III BOP.** Test BOPE against 3-1/2" and 2-7/8" tubing to 1500 psi per DOG regulations. DOG to witness BOPE test.

3. Back out hold down pins and unset inflatable packer. Re-land hanger and secure with hold down pins. Allow element to relax overnight. Pull donut to the floor while stripping through closed annular. If packer element is swabbing, rig up slick line unit. Install TIW valve on donut and rig up lubricator with pump-in sub. Pressure test lubricator and TIW valve through pump-in sub to 1500 psi. Pressure up control line to open SCSSV at 355'. Shift sliding sleeve open at 2800'. Rig down slick line company.

4. Pull existing 3-1/2" and 2-7/8" tubing completion and jewelry. Lay down jewelry and send in for reconditioning. Keep hole full at all times while pulling out of the hole. Monitor well for swabbing due to possible swollen packer element.

5. Make up 9" 45# casing scraper and run in the hole to +/- 2000' while picking up an additional +/- 1650' of new 3-1/2" tubing. Pull out of the hole and stand back 3-1/2" tubing out of the way of the 2-7/8" tubing.

6. Run in the hole with open ended 2-7/8" tubing (plus additional 3-1/2" tubing) to bottom of the hole at 3150' (last tagged during work over in 2001). Rig up stimulation company. Acidize Vaqueros Sand production interval (3103' to 3150') by equalizing 1200 gallons of inhibited 15% HCl (72 hours), including appropriate additives, down the tubing across the sand face.

7. Pull out of the hole and lay down all 2-7/8" tubing and send in to inventory.

8. Rig up cable spooler and stainless steel tubing line spoolers. Make up ESP equipment including pump, motor and cable. Run ESP equipment, cable and chemical lines to 2000' while banding to new tubing as per attached drawing.

9. Make up tubing hanger. Install cable feed through, control line and chemical line.

10. Land hanger in tubing spool and secure with lock down pins. Rig up slick line unit. Install TIW valve on riser and rig up lubricator with pump-in sub. Pressure test lubricator and TIW valve through pump-in sub to 1500 psi. Pressure up control line to open SCSSV at 355'. Set plug in "BX" nipple at 1912'. Pull out of the hole. Fill tubing with water (if necessary) and pressure up to 1500 psi to set hydraulic packer. Close SCSSV and bleed off pressure above to test. Pressure test annulus to 500 psi. Equalize pressure across SCSSV and pressure up on control line to open. Run in the hole and equalize fluid across plug and retrieve from 1912'. Rig down slick line company.

11. Set back pressure valve. Remove BOP. Install and test tree. Hook up cable to variable speed drive. Hook up flow line. Hook up control line and chemical line.

12. Start pump and check for proper rotation and monitor parameters using monitoring system. Rig down equipment and release crews.

normally close in the absence of any power or energy to hold them open. The SSV will use a charge of nitrogen or hydraulic fluid to hold it open, and the SSSV will depend upon a hydraulic fluid source to hold it open. In the event of a shutdown scenario calling for closing of the SSV and SSSV valves, a solenoid will release a small amount of nitrogen pressure or hydraulic fluid to a storage tank and the valves will spring closed. A small pump will be provided to allow re-energization of the SSV and the SSSV valves when a well is restarted after a shutdown. The selection of the SSV and SSSV well actuators will be made with the intent of keeping a very low surface profile.

A pair of stainless steel equipment enclosures will be located at the wellhead, one used to house the wellhead safety control panel, including high/low pressure pilots, hydraulic reservoir, and other necessary actuation equipment, and the second electrical box to house the utility power transformer and receptacle and electronics associated with the metering and communication of safety signals. The wellhead safety control panel and electrical panel are each expected to be 3' x 4' x 4' in size. The electrical panel will also house the electrical service receptacle, an auxiliary stop switch to be used by well servicing personnel, and will include a tamper switch to provide annunciation at EOF of possible tampering. A surveillance camera will be mounted on the 421-2 pier to monitor the condition within the vicinity. The live video feed will be displayed in the EOF control room.

The ESP will be equipped with sensors to monitor operating conditions such as motor load, motor winding temperature, intake temperature, intake and discharge pressures, and pump vibration. This data will be transmitted over the power feed back to the motor control panel located at the EOF. The motor control panel will incorporate safety switches to automatically shut-in the pump in the event of a deviation from normal operating conditions such as might be caused by a pipeline rupture or a process interrupt.

At the EOF tie-in, a Flow Safety Valve (FSV) will be provided to prevent backflow of oil from the pipeline, thus providing protection against uncontrolled oil flow in the event of a catastrophic oil line failure.

2.2 Proposed Crude Oil Processing

Lease 421 production would be easily accommodated at EOF. The Lease 421 production would commingle with Platform Holly production. The combined Platform Holly and Lease 421 production would remain within the existing Platform Holly to EOF production limits. In the event that Platform Holly production ceases and Platform Holly is decommissioned, Lease 421 production would also cease and its facilities would be decommissioned. The Lease 421 re-commissioning project will not extend the life of the EOF.

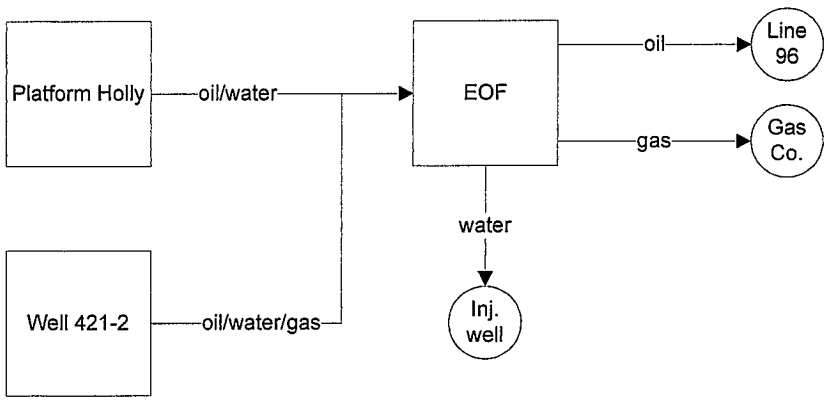

Lease 421 production would be delivered through a replacement pipeline to EOF. Within EOF, this line would include high and low pressure safeties, and a shutdown valve. Connections would be provided to deploy a temporary pig receiver for intermittent pipeline cleaning and inspection. Downstream of the pipeline shutdown valve, the Lease 421 production would flow through a multiphase flow meter for proper allocation of the Lease 421 oil, gas and water production. This flowmeter and its related electronics would fit within a 3 ft

square by 5 ft high area. The production line would then connect to the 8" wet oil production line from Platform Holly.

A new programmable logic controller (PLC) would be installed near the new multiphase flowmeter. This PLC would be placed in an upgraded electrical cabinet that is currently near the pig receivers to monitor and control the Lease 421 production facilities; including the electric submersible pump (ESP) at the well and leak detection and safety shutdown for the Lease 421 pipeline. The PLC would include local control functions, as well as communication to the existing EOF control room for remote monitoring and control. A variable speed drive (VSD) package consisting of a drive cabinet and a step-up transformer would be located near the pig receivers at EOF to power and control the ESP at the well. This VSD package would be approximately 3 ft by 8 feet by 6 feet high. A new power/communication cable would run underground from the VSD at EOF to connect to the ESP and pipeline at Lease 421.

2.3 Proposed Pipelines

2.3.1 Production Pipeline

An existing wrapped and coated 6" shipping line runs from the 421-1 pier along a Venoco right of way approximately 1300' along the old seawall to a point just south of the 12th tee of Sand Piper Golf Course and then turns north into the Holly pipeline right of way and runs another 500' to the edge of the EOF. It terminates at a valve box located on an easement granted to Venoco that lies just outside the limits of the EOF parcel, south of the heliport. This line was last hydrotested by Mobil in March 1994. The existing shipping line will be extended to go all the way to pier 421-2. It will then by hydrotested to 100 psi and internally coated with a new plastic coating. The 6" pipe will be protected against external corrosion by enhancing the impressed current cathodic protection system on the Holly pipelines to include the Lease 421 shipping line.

A new 3" flowline will be inserted inside the existing 6" pipeline. This flowline will be designed with a maximum operating pressure of 275 psig and a minimum hydrotest pressure of 425 psig and be rated for continuous operation at temperatures up to 130 °F. At a minimum, the pipeline will hold the indicated test pressure for a period of not less than 8 hours. Hydrotest water will be provided by the Goleta Water District connection located at the EOF and drained back to the EOF when finished. The returned hydrotest water will be introduced into the oil processing system for treatment and disposal.

A leak detection sensor will be installed on the 6" line. The sensor will detect the presence of hydrocarbon in the annular space between the 6" line and the 3" flowline. In the event of a leak, the ESP well will be automatically shut in and an alarm will sound at the EOF.

A non-metallic composite pipe will be used for the 3" flowline. This pipe is made of a type of high density polyethylene (HDPE) with a layer of metal or fiberglass mesh imbedded within. This type of pipe offer good chemical resistance and excellent flexibility. Because it is non-conductive and immune to galvanic electrochemical effects, it will not corrode like metal piping. It is also impervious to many aggressive chemicals as well as scale build-up.

2.3.2 Production Pipeline Installation

To ensure integrity of the existing 6" line between Leas 421 and EOF, a new internal pipe lining will be installed. This lining will be applied using a process known as "fold and form" sliplining. This is a process by where a thin-wall, High Density Polyethylene (HDPE) liner is temporarily deformed, into a "heart" shape cross-section, which will then allow insertion into the existing 6" oil pipeline. After insertion, the pipe is "inflated" back into its circular cross section. The inflation process is accomplished using low pressure (less than 100 psig) air or water. In some cases, a heated media, such as hot water, may be used to aid in restoring the final shape of the liner.

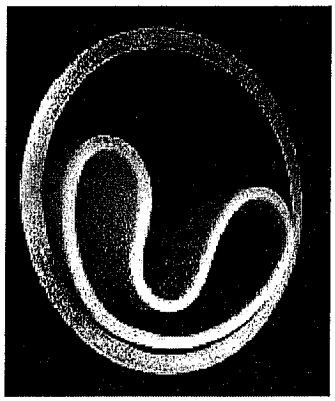

Figure 2: Fold and form liner.

Along the existing 6" oil line, at a point close to the location of the 1994 leak, there is an exposed section with two 90° bends where the protective wrapping has been lost. A section of pipe, approximately 25 feet in length, will be cut out and replaced with new wrapped 6" pipe. The section will serve as an intermediate pulling point for both the 6" slipline and the internal flow line.

A pulling winch will be located at this position and will pull the 6" "fold and form" liner to this location from two insertion points; one insertion point will be located in the pier 421 access roadway, and the other insertion point will be located adjacent to the existing valve vault located just outside the EOF fence, alongside the access roadway. After the liner has been pulled through each of the two pipeline segments, it will be inflated into final size and tested. The section of 6" line between the two pulling locations will be temporarily left open in order to effect the pull of the internal flowline.

In a manner similar to the installation of the 6" "Fold and form" liner, the 3" internal flow line will be pulled into the now-internally lined 6" oil pipeline. Following integrity testing of the newly installed liner in the existing 6" pipeline, a pulling winch will again be located at the proposed pulling location. The 3" flowline will be pulled into this line from two directions; one insertion point will be located in the pier 421 access roadway, and the other insertion point will be located adjacent to the existing valve vault located just outside the EOF fence, alongside the access roadway. After the two flowlines have been pulled through each of the two pipeline segments, they will be joined together into one continuous segment and pressure tested. Final assembly will include installation of annular casing end seals and anchors at the ends of the existing 6" out pipe.

Following successful integrity testing of the 3" flowline, the final tie-ins will take place. Piping will be installed to connect the 3" flowline from the valve vault outside of EOF, to an existing flange connection point on the 8" pipeline carrying produced oil from Platform Holly. This connection point is located at the southwest corner of the EOF inside the fence. Pressure sensors and gauges as well as a flowmeter sensor will be installed on this portion of the flowline to monitor production from Well 421-2. A connection for a temporary pig receiver will also be installed in this location to receive cleaning pigs that may be run in the flowline in the future.

At the conclusion of the flowline installation work, the discontinuous 6" containment piping at the pipe pulling location will be "clam shelled" back together again, thus providing continuous 100% containment. The re-installation will again be pressure tested to verify containment piping integrity.

2.4 Installation of Electrical Cables

The ESP at well 421-2 will receive power through using a direct burial and armored 200 KVA, 1,500 VAC power cable that will run underground within the existing access easement. The maximum electrical power requirement to operate Well 421-2 is 115 kW. In addition, a smaller 480 VAC cable will also be installed in the same excavation. This cable will provide electrical power for well instrumentation and control systems, utility power receptacle, and an integral communication cable for data transfer. The delivery voltage of the utility power will be 480V, and a small step-down transformer will be installed in the 421-2 electrical panel to drop the voltage down to 120V. The utility power outlet will be located inside of the power panel, and will be a heavy duty, 20 Amp, "Arktite" type of plug receptacle. This type of receptacle requires specially designed mating plugs which are circuit breaking and require a twist to lock action in order to engage or disengage.

The proposed new electrical cables will require a minimum burial depth of 24" beneath the existing access road and will be designated with power cable markers along the route. The cable route will be surveyed and staked within the access road right of way. A 2500' by 1' by x 30" deep trench will be excavated. 6" of sand bedding will be placed into the bottom of the ditch. The two power cables will be placed into the ditch; and backfilled with a concrete slurry mixture to a minimum depth of 6" over the cables. The remainder of the ditch will be filled using materials excavated from the site, and the surface will be restored. The estimated cut and fill volumes are as follows:

Total Cable Excavation Volume:
2500' x 2.5' x 1' = 6,250 Ft^3 or 231 Yd^3

Sand Bedding (Imported):
This assumes bedding will be import material. Depending upon condition of excavated material, it may be possible to reuse excavated materials. This decision cannot be made until time of actual construction.
2500' x .5' x 1' = 1,250 Ft^3 or 46 Yd^3

Slurry (Imported):
2500' x .75' x 1' = 1,875 Ft^3 less 125 Ft^3 or 65 Yd^3

Backfill:
2500 x 1.25' x 1' = 3,125 Ft^3 or 115 Yd^3

Export:
231 Yd^3 - 46 Yd^3 - 65 Yd^3 = 120 Yd^3

In addition to the above excavation volumes, additional excavation will be required to repair the existing 6" oil line at the 12th tee area of the Sandpiper Golf Course and to expose piping between Piers 1 and 2. It is assumed that the amount of excavation and backfill for this other work will be equal. The amount of material to be excavated and backfilled at these other locations is 116 Yd^3.

After the cable and conduit has been installed, the trench will be back filled and compacted in conjunction with access road reconstruction. Trenching and backfill will not take more than one day. Inside the EOF, the cables will be routed to tie into the existing Ellwood systems.

2.5 Communications

The Motor Control panel at EOF will provide a Modbus digital output. The Motor Controller will communicate with the existing EOF Remote Monitoring System (RMS), via a new, dedicated, Modbus Plus Based, cable link. A PLC installed in the Motor Controller will collect both wellhead data from the 421-2 pier and performance data from the ESP. All of the operational systems and safety systems for the 421-2 well will be provided with a real time monitoring capability at the RMS Operator Interface Terminals (OIT) located in the EOF control room. All Local Alarms and Shutdown Safeties for the well will be displayed at the RMS. The well will have the capability of being shutdown remotely from the RMS, Operator Interface Terminal, and by the EOF Emergency Shutdown.

2.6 421-2 Caisson Repairs

The south (ocean facing) side of the 421-2 caisson was previously repaired to address integrity issues caused by deteriorated caisson wall. The repair was carried out by installing a new wall face on the south side and a portion of the east and west sides of the caisson. As part of the return to production project, the north wall, as well as the remaining portions of the east and west walls will be repaired.

Steel piles will be installed in 25 foot deep holes drilled around the caisson. The piles will be spaced 6 feet apart. The new wall will consist of pre-cast concrete panels installed in between the steel piles. Concrete will then be poured in the space between the new concrete panels and the existing caisson.

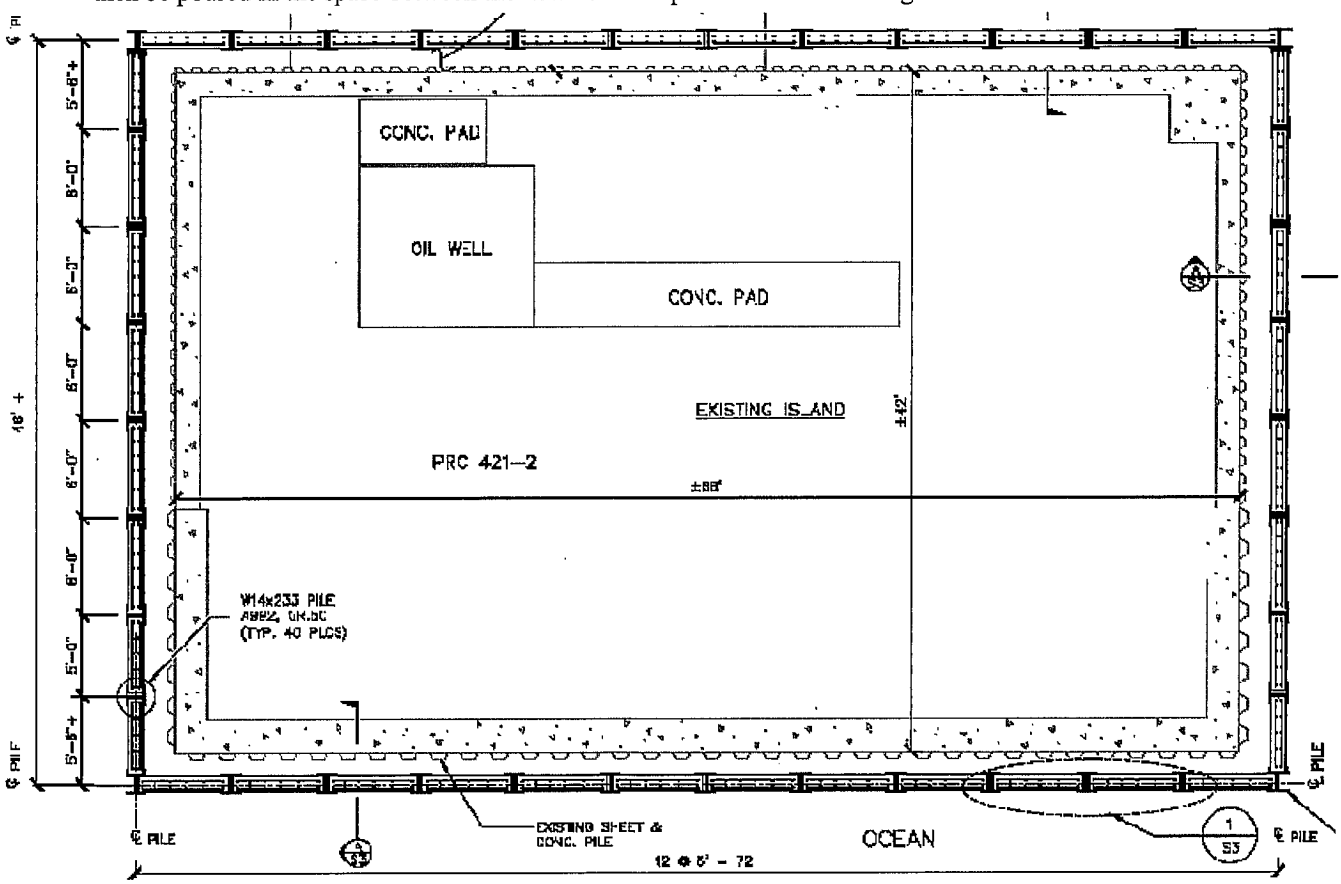

2.7 Construction and Impacts

2.7.1 Construction Activities

Construction for the Lease 421 Return to Production Project will involve the sequence of events listed below. Some of these tasks may occur concurrently.

1) 421-2 caisson repair
2) Installation of Electric Submersible Pump (ESP) with tubing, packer and subsurface control equipment in well 421-2,
3) Installation of electrical motor control panel, transformer, and power cable connections at the EOF;
4) Installation of surface control equipment at the 421-2 wellhead,
5) Pigging and clean-up of the existing 6" oil pipeline;
6) Cut-out and removal of two 90° bends within existing 6" oil pipeline and installation of internal liner;
7) Installation of 6" pipeline extension to 421-2 pier and installation of tie-in piping inside EOF
8) Insertion of new 3" flowline within existing 6" oil line;
9) "Clamshell" restoration of existing 6" pipeline at area where 90° bends removed;
10) Trench excavation and installation of new power cables in existing access road;
11) Testing of pipelines and equipment;
12) Work site restoration and cleanup.

The 6" shipping line was flushed with water and hydro-tested in March 1994. It has not been used since. Any field cuts will be made above a portable containment basin with a vacuum truck present to capture any fluid and prevent contamination to the surrounding environment. Insertion of the new plastic liner and the 3" flowline within the 6" shipping line will occur by placing the winches and spooling units at the intermediate block valve location or either end of the pipeline minimizing the impact on the Golf Course activities.

The construction activity will be most notable during the periods of repairing the 421-2 caisson, insertion of the plastic liner and the new flow line within the 6" pipeline, burial of the power cable and movement of workover rig to and from pier 421-2. Each one of these operations should be very brief. The equipment and personnel anticipated during the various tasks of this project are as follows:

EQUIPMENT	PERSONNEL	TOOLS
1 Trencher	1 Project Supervisor	2 Pneumatic Wrenches
1 Backhoe with loader	1 Welder	2 Pneumatic Grinders
1 Power Generator	1 Welder's Helper	2 Oxy-acetylene Cutting Rigs
1 Loader	1 Heavy Equipment Operator	1 Hydraulic Power Unit
1 Dump Truck	1 Pipefitter	1 HDPE Fusion Machine
1 Vacuum Truck	3 Pipe Installation Laborers	1 Hydrotest Pump
1 Camera Truck	2 Surveyors	
1 Flatbed Truck with service crane	1 Truck Driver	
1 Operations Van	3 Electrical installation	
1 Well Service/ Workover Rig	1 Mechanic for Pump	
1 Trailer Mounted Mud Pump	6 Workover Rig Operators	
1 Cable Spooler	5 Semi Truck Drivers	
1 Blow Out Preventer Stack		
1 Crane with Pile Driver		
5 Semi Trucks		

During the construction phase of the project all construction equipment and materials will be staged in an existing easement area immediately adjacent to the EOF west fence line (refer to Drawing # 2488-G-042). A 30-foot by 30-foot helipad at the south end of the EOF may also be used as an additional staging area for vehicles and material should the need arise.

The work schedule anticipates a total of approximately 90 work days with hours of construction being between 7:00 AM and 7:00 PM. Movement of traffic along the access road through the Sand Piper Golf Course will be regulated in order to minimize impacts and disturbance to the Golf Course operation.

The down hole well work associated with the 421-2 well is expected to take a maximum of 15 days. A portable well service rig will be placed over the 421-2 well and proceed to remove the tubing, packers and flow isolation valves that were placed in the well during previous operations. The ESP and SSSV will be installed at this time. The completion work will be based upon a program approved by the California State Lands Commission and the Department of Oil, Gas and Geothermal Resources.

The emissions from the constructions spread for the project have been estimated and are presented in Attachment 4.

In order to minimize construction impacts, Best Management Practices (BMP's) will be implemented through the construction phase. Venoco will implement site-specific construction mitigation plans, including a traffic minimization plan and equipment refueling plan. Overall, no significant impacts are expected during construction and operation of the Lease 421 well and associated equipment.

2.7.2 Changes to Existing Setting/ Project Impacts

The resumption of production at Lease 421 is not expected to have any major impacts to the surrounding environment. No processing equipment will be installed on the pier since all processing will be done using existing equipment in the EOF. The use of an ESP will eliminate the surface pumping equipment and noise associated with the previous oil pumping equipment. The design of the double walled pipeline will significantly reduce chances for a spill to occur. A leak detection sensor as mentioned previously will be installed and will shut the wells down in the unlikely event of a pipeline leak.

Maintenance activities are expected to be minimal. A production operator will visit the well daily to ensure correct operation.

At intervals typically expected to be a minimum of two years, the 421-2 pump may need to be retrieved and replaced or rebuilt in order to meet varying production requirements. If this occurs, a workover rig will be necessary to perform the operation. An entire pump change-out operation is expected to take approximately three days.

The road bed will receive minimal traffic, and as such, will not need much maintenance or remedial grading. However, should the need arise, additional gravel or surface material may be added in order to protect against the formation of potholes and settlement.

TABLE 1
VENOCO BEACHFRONT 421 LEASE
CONSTRUCTION EQUIPMENT

ONSITE EQUIPMENT	NUMBER	RATING (hp)	AVERAGE LOAD (%)	EM. FAC. CODE	SCHEDULE			EMISSION FACTORS (g/hp-hr)[1]				
					hrs/day	days/wk	weeks	ROG	NO_x	SO_2	CO	PM_{10}
A-Frame Truck	1	170	41	8	8	5	3	0.57	11.00	0.20	2.28	0.48
Backhoe	1	115	46.5	2	8	5	3	1.95	8.80	0.19	7.34	1.21
Ditcher/Trencher	1	150	69.5	10	6	5	2	1.16	8.80	0.21	4.60	0.86
Flat Bed Truck	1	170	41	8	8	5	3	0.57	11.00	0.20	2.28	0.48
Generator	1	40	74	10	12	5	3	1.16	8.80	0.21	4.60	0.86
Loader	1	160	54	6	0	0	0	1.12	8.80	0.19	2.71	0.76
Mud Pump (trailer mounted)	1	100	74	10	6	5	1	1.16	8.80	0.21	4.60	0.86
Welding Truck	1	150	41	8	8	5	3	0.57	11.00	0.20	2.28	0.48
10 Ton Winch (Grundo)	1	35	80	10	8	2	1	1.16	8.80	0.21	4.60	0.86
Dump Truck	1	170	75	8	6	4	2	0.57	11.00	0.20	2.28	0.48
Fusion Machine	1	25	75	10	8	5	2	1.16	8.80	0.21	4.60	0.86
Hydrotest Pump	1	60	75	10	8	3	1	1.16	8.80	0.21	4.60	0.86
Vacuum Truck	1	170	75	8	8	3	1	0.57	11.00	0.20	2.28	0.48
Well Service/Workover Rig	1	400	80	10	12	2	2	1.16	8.80	0.21	4.60	0.86
X-Ray Truck	1	150	15	8	6	5	2	0.57	11.00	0.20	2.28	0.48
Jet Pump (diesel)	0	140	80	11	8	5	0	1.27	11.20	0.21	3.03	0.95
Pile Driver (diesel)	1	400	50	11	3	4	0	1.27	11.20	0.21	3.03	0.95
Drill Rig (diesel)	1	125	80	11	5	5	0	1.27	11.20	0.21	3.03	0.95
Crane - 45 ton (power) (gasolin	1	109	80	11	8	5	0	1.27	11.20	0.21	3.03	0.95
Air Compressor (diesel)	1	40	80	11	3	4	0	1.27	11.20	0.21	3.03	0.95
Concrete Pump (diesel)	1	40	50	11	6	2	0	1.27	11.20	0.21	3.03	0.95
Welder (gasoline)	1	50	50	11	7	5	0	1.27	11.20	0.21	3.03	0.95
Fugitive Dust	0.2 acres		100	18	12	5	2					3.49
												lb/acre-hr

[1] Emission factors from APCD Form-24 - Table 2, tied to Em. Fac. Code above.

OFFSITE EQUIPMENT	NUMBER	VEHICLE TYPE	DISTANCE (miles/day)	SCHEDULE		EMISSION FACTORS (g/mile)[2]				
				days/wk	weeks	ROG	NO_x	SO_2	CO	PM_{10}
Operations Van	1	MDT	100	5	2	0.25	1.63	0.3	3.07	0.465
Pickup Truck	1	MDT	100	5	2	0.25	1.63	0.3	3.07	0.465
Camera Truck	1	MDT	100	5	1	0.25	1.63	0.3	3.07	0.465
X-Ray Truck	1	MDT	100	5	2	0.25	1.63	0.3	3.07	0.465

[2] ROG, NO_x, and CO factors from MVIE7G, 2002 Vehicle Mix. SO_2 from SCAQMD CEQA manual, Table A9-5-L. PM_{10} from SCAQMD CEQA manual, Table A9-5-K-6. All factors at 55 mph.

TABLE 2
VENOCO BEACHFRONT 421 LEASE
DAILY AND TOTAL CONSTRUCTION EMISSIONS

EQUIPMENT	MAXIMUM DAILY EMISSIONS (lb/day)						TOTAL EMISSIONS (pounds)				
	ROG	NO_x	SO_2	CO	PM_{10}		ROG	NO_x	SO_2	CO	PM_{10}
A-Frame Truck	0.7	13.5	0.2	2.8	0.6		10.5	202.8	3.7	42.0	8.9
Backhoe	1.8	8.3	0.2	6.9	1.1		27.6	124.5	2.7	103.8	17.1
Ditcher/Trencher	1.6	12.1	0.3	6.3	1.2		16.0	121.3	2.9	63.4	11.9
Flat Bed Truck	0.7	13.5	0.2	2.8	0.6		10.5	202.8	3.7	42.0	8.9
Generator	0.9	6.9	0.2	3.6	0.7		13.6	103.4	2.5	54.0	10.1
Loader	0.0	0.0	0.0	0.0	0.0		0.0	0.0	0.0	0.0	0.0
Mud Pump (trailer mounted)	1.1	8.6	0.2	4.5	0.8		5.7	43.1	1.0	22.5	4.2
Welding Truck	0.6	11.9	0.2	2.5	0.5		9.3	179.0	3.3	37.1	7.8
10 Ton Winch (Grundo)	0.6	4.3	0.1	2.3	0.4		1.1	8.7	0.2	4.5	0.8
Dump Truck	1.0	18.6	0.3	3.8	0.8		7.7	148.4	2.7	30.8	6.5
Fusion Machine	0.4	2.9	0.1	1.5	0.3		3.8	29.1	0.7	15.2	2.8
Hydrotest Pump	0.9	7.0	0.2	3.7	0.7		2.8	21.0	0.5	11.0	2.0
Vacuumn Truck	1.3	24.7	0.4	5.1	1.1		3.8	74.2	1.3	15.4	3.2
Well Service/Workover Rig	9.8	74.5	1.8	38.9	7.3		39.3	298.0	7.1	155.8	29.1
X-Ray Truck	0.2	3.3	0.1	0.7	0.1		1.7	32.7	0.6	6.8	1.4
Jet Pump (diesel)	0.0	0.0	0.0	0.0	0.0		0.0	0.0	0.0	0.0	0.0
Pile Driver (diesel)	1.7	14.8	0.3	4.0	1.3		0.0	0.0	0.0	0.0	0.0
Drill Rig (diesel)	1.4	12.3	0.2	3.3	1.0		0.0	0.0	0.0	0.0	0.0
Crane - 45 ton (power) (gasolin	2.0	17.2	0.3	4.7	1.5		0.0	0.0	0.0	0.0	0.0
Air Compressor (diesel)	0.3	2.4	0.0	0.6	0.2		0.0	0.0	0.0	0.0	0.0
Concrete Pump (diesel)	0.3	3.0	0.1	0.8	0.3		0.0	0.0	0.0	0.0	0.0
Welder (gasoline)	0.5	4.3	0.1	1.2	0.4		0.0	0.0	0.0	0.0	0.0
Fugitive Dust					8.4						83.8
Operations Van	0.1	0.4	0.1	0.7	0.1		0.6	3.6	0.7	6.8	1.0
Pickup Truck	0.1	0.4	0.1	0.7	0.1		0.6	3.6	0.7	6.8	1.0
Camera Truck	0.1	0.4	0.1	0.7	0.1		0.3	1.8	0.3	3.4	0.5
X-Ray Truck	0.1	0.4	0.1	0.7	0.1		0.6	3.6	0.7	6.8	1.0
Total	28.0	265.7	5.8	102.8	29.6	Total	155.4	1,601.6	35.2	628.1	202.2