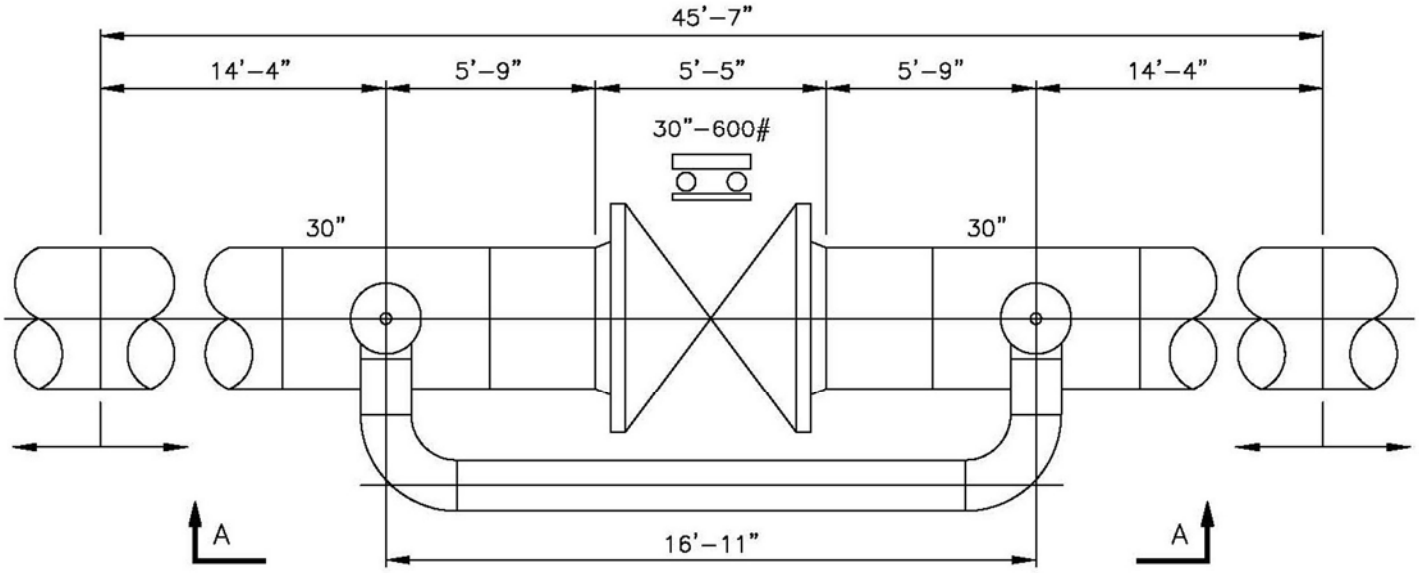

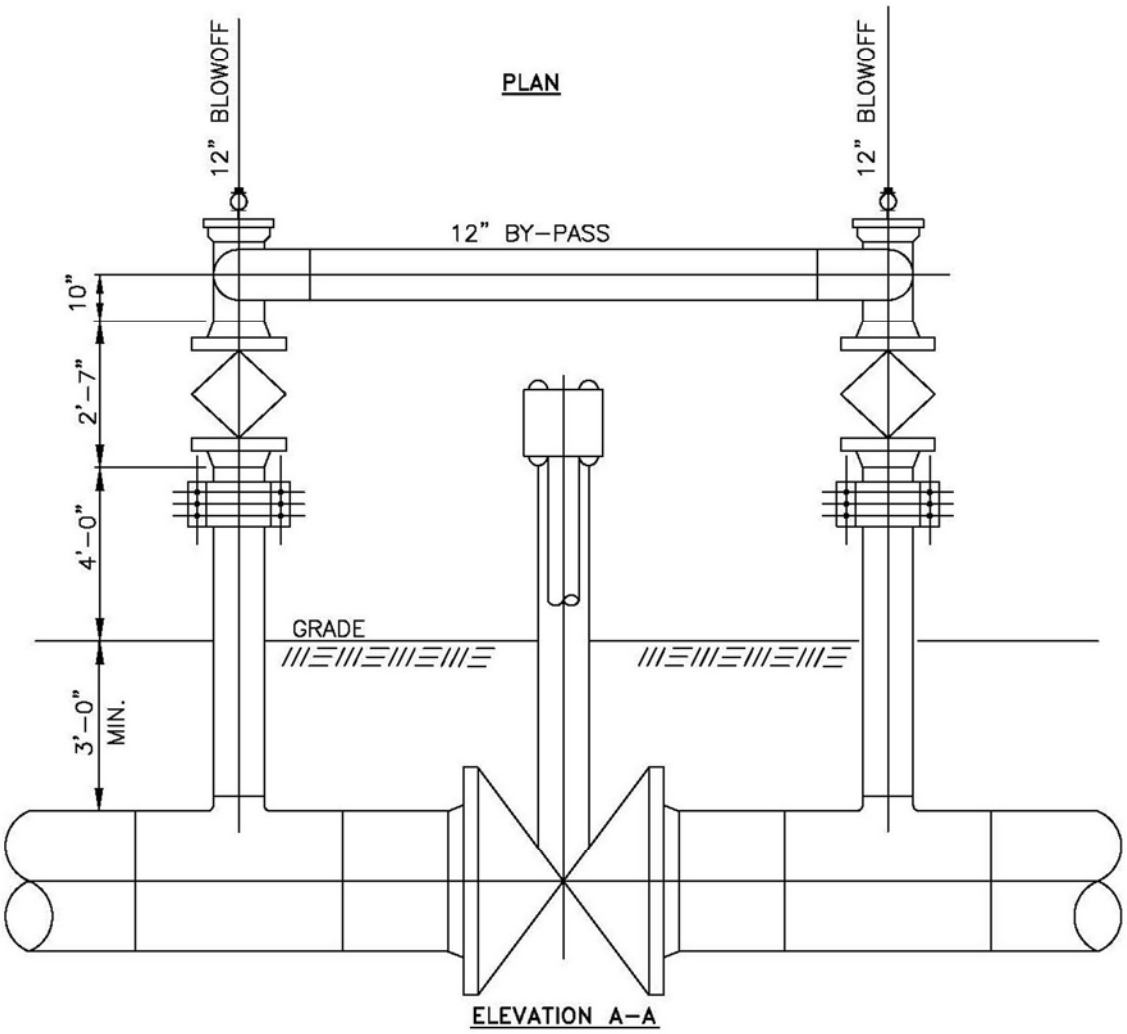

El Paso Line 1903 Conversion Project

Figure 2.2-2
Typical Detail of 30" Block Valve

El Paso, ENTRIX Inc. 8/17/04